FEDERAL SUPPLY CLASS
5340

RATIONALE

CORRECT TYPO FOR BAND WIDTH SHOWN IN GRAPHICS. TABLE REDRAWN TO CURRENT SAE FORMAT. MARKING INSTRUCTION IN GRAPHICS REPLACED BY FLAGNOTE /12/ IN THE NOTES SECTION. PROCUREMENT SPECIFICATION NOTE UPDATED TO CURRENT FORMAT. INVENTORY DISPOSITION NOTE ADDED.

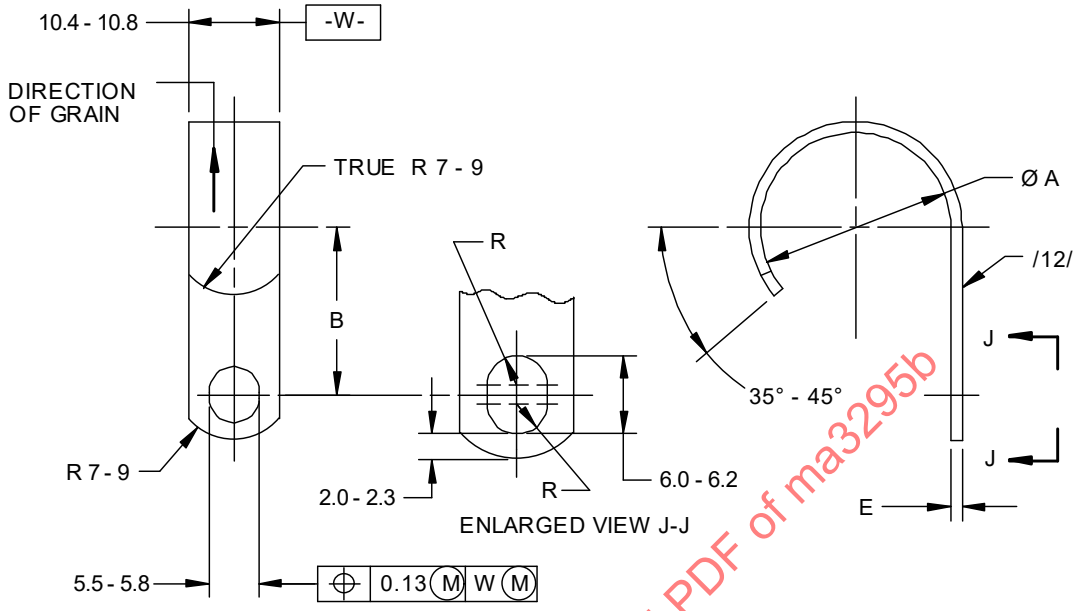

FIGURE 1 - CLIP

TABLE 1 - DIMENSIONS A-E & WEIGHTS

BASIC NUMBER MA3295 SIZE CODE	NOMINAL TUBE OD (METRIC) mm	SUITABLE FOR TUBE (INCHES)	ØA	B	E	APPROX MASS kg/100
MA3295-02	3.2	.125	7.2-7.8	13.1-13.6	0.7-0.9	0.203
MA3295-02	4	--	7.2-7.8	13.1-13.6	0.7-0.9	0.203
MA3295-04	5	.1875	9.2-9.8	14.0-14.5	0.7-0.9	0.235
MA3295-04	6	.250	9.2-9.8	14.0-14.5	0.7-0.9	0.235
MA3295-06	8	.3125	11.2-11.8	15.0-15.5	0.7-0.9	0.268
MA3295-07	10	.375	13.2-13.8	15.9-16.4	0.7-0.9	0.300
MA3295-08	11	.4375	15.0-15.8	17.3-17.8	0.9-1.1	0.419
MA3295-08	12	.500	15.0-15.8	17.3-17.8	0.9-1.1	0.419
MA3295-10	14	.5625	17.0-17.8	18.2-18.7	0.9-1.1	0.459
MA3295-11	16	.625	19.0-19.8	19.1-19.6	0.9-1.1	0.499
MA3295-12	18	.6875	21.0-21.8	20.0-20.5	0.9-1.1	0.539
MA3295-13	20	.750	23.0-23.8	21.0-21.5	0.9-1.1	0.580
MA3295-14	22	.875	25.0-25.8	22.0-22.5	0.9-1.1	0.621
MA3295-15	25	1.000	28.0-28.8	23.5-24.0	0.9-1.1	0.682
MA3295-16	30	1.125	33.0-33.8	25.8-26.3	0.9-1.1	0.782
MA3295-17	32	1.250	35.0-35.8	27.0-27.5	0.9-1.1	0.824
MA3295-18	40	1.500	43.0-43.8	30.8-31.3	0.9-1.1	0.986

For more information on this standard, visit
https://www.sae.org/standards/content/MA3295B/

THIRD ANGLE PROJECTION

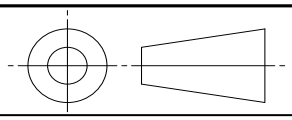

ISSUED 1990-11 REAFFIRMED 2012-12 STABILIZED 2023-10 REVISED 2024-05

CUSTODIAN: G-3/G-3E

PROCUREMENT SPECIFICATION: MA3399

METRIC AEROSPACE STANDARD

CLIP - SPRING, TENSION,
INNER 5 MM BOLT HOLE,
AMS5525, METRIC

MA3295™
SHEET 1 OF 2

REV. B

SAE Executive Standards Committee Rules provide that: " This report is published by SAE to advance the state of technical and engineering sciences. The use of this report is entirely voluntary, and its applicability and suitability for any particular use, including any patent infringement arising therefrom, is the sole responsibility of the user."

SAE reviews each technical report at least every five years at which time it may be revised, reaffirmed, stabilized, or cancelled. SAE invites your written comments and suggestions.

Copyright © 2024 SAE International
All rights reserved. No part of this publication may be reproduced, stored in a retrieval system, transmitted, in any form or by any means, electronic, mechanical, photocopying, recording, or otherwise, or used for text and data mining, AI training, or similar technologies, without the prior written permission of SAE.

TO PLACE A DOCUMENT ORDER: **Tel: 877-606-7323 (inside USA and Canada)** **Tel: +1 724-776-4970 (outside USA)**
Fax: 724-776-0790 **Email: CustomerService@sae.org** **SAE WEB ADDRESS: http://www.sae.org**

SAENORM.COM : Click to view the full PDF of ma3295b