FEDERAL SUPPLY CLASS
5306

RATIONALE

UPDATE THREAD SPECIFICATION TO AS8879, UPDATE TO ANSI Y14.5M-1982, REVISE FPI REQUIREMENTS TO ASTM E1417/1417M, ADD EDGE DISTANCE EXCEPTION FOR HEAD MARKING, ADD NEW NOTE TO REPLACE DATUM Y WITH DATUM Z FOR SHORT LENGTHS, ADD AS3062 FOR THREAD RUNOUT, CONVERT GD&T NOTES TO FEATURE CONTROL FRAMES, DATUMS, AND SYMBOLS, ADD SURFACE TEXTURE REQUIREMENTS FOR TOP AND END, ADD SURFACE TEXTURE SYMBOLS PER ASME Y14.36M, FIGURE 1 REDRAWN AND GENERAL EDITORIAL UPDATE.

NOTICE

THE INITIAL SAE PUBLICATION OF THIS DOCUMENT WAS TAKEN DIRECTLY FROM U.S. MILITARY STANDARD MS9788, NOTICE 1. THIS SAE STANDARD RETAINS THE SAME PART NUMBERS ESTABLISHED BY THE ORIGINAL MILITARY DOCUMENT.

ANY REQUIREMENTS ASSOCIATED WITH QUALIFIED PRODUCTS LISTS (QPL) MAY CONTINUE TO BE MANDATORY FOR DOD CONTRACTS. REQUIREMENTS RELATING TO QPLS HAVE NOT BEEN ADOPTED BY THE SAE FOR THIS STANDARD AND ARE NOT PART OF THIS SAE DOCUMENT.

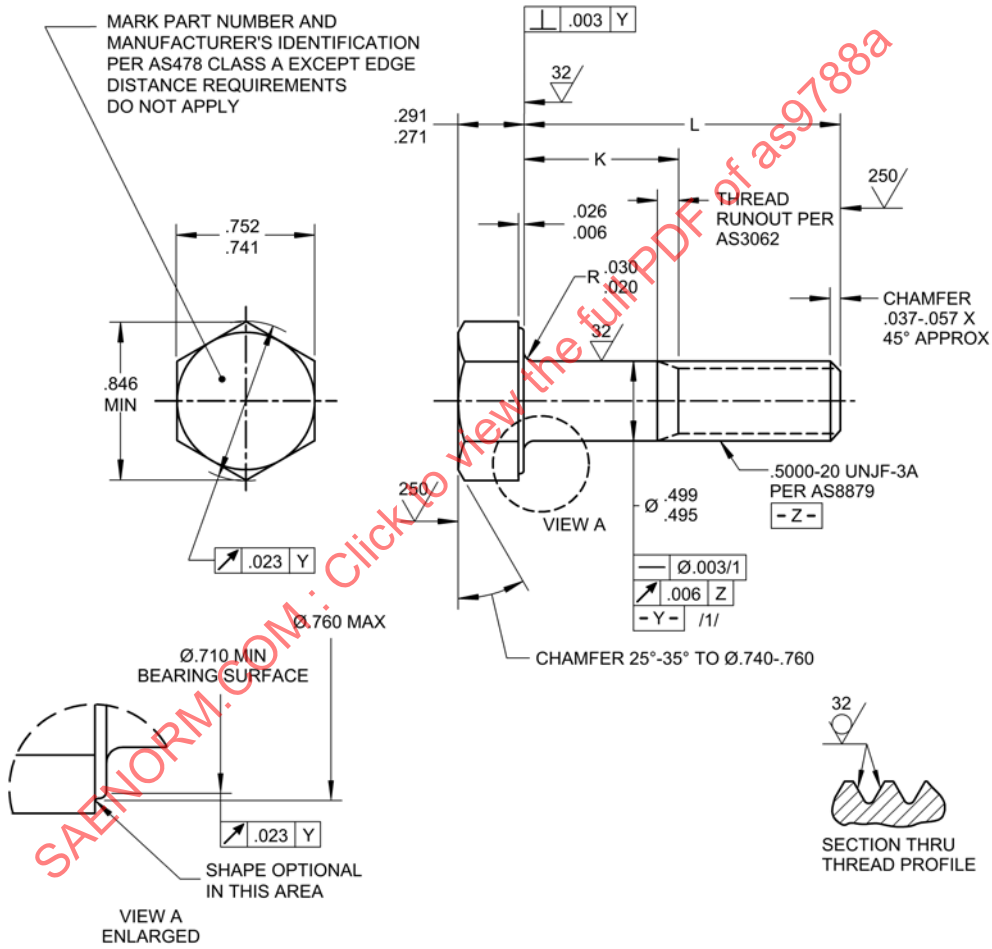

FIGURE 1 - BOLT

SAENORM.COM : Click to view the full PDF of as9788a

SAE values your input. To provide feedback on this Technical Report, please visit http://www.sae.org/technical/standards/AS9788A

THIRD ANGLE PROJECTION

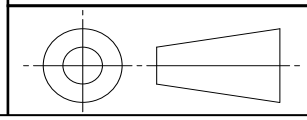

ISSUED 1999-08 REAFFIRMED 2005-05 REVISED 2015-06

CUSTODIAN: E-25

PROCUREMENT SPECIFICATION: AS7474

AEROSPACE STANDARD

(R) BOLT, MACHINE - HEXAGON HEAD, FULL SHANK, CORROSION RESISTANT STEEL (UNS S17400), 140 KSI MIN UTS, .5000-20 UNJF-3A

AS9788
SHEET 1 OF 2

REV. A

SAE Technical Standards Board Rules provide that: "This report is published by SAE to advance the state of technical and engineering sciences. The use of this report is entirely voluntary, and its applicability and suitability for any particular use, including any patent infringement arising therefrom, is the sole responsibility of the user."

SAE reviews each technical report at least every five years at which time it may be revised, reaffirmed, stabilized, or cancelled. SAE invites your written comments and suggestions.

Copyright 2015 SAE International
All rights reserved. No part of this publication may be reproduced, stored in a retrieval system or transmitted, in any form or by any means, electronic, mechanical, photocopying, recording, or otherwise, without the prior written permission of SAE.
TO PLACE A DOCUMENT ORDER: Tel: 877-606-7323 (inside USA and Canada) Fax: 724-776-0790 Tel: +1 724-776-4970 (outside USA) Email: CustomerService@sae.org SAE WEB ADDRESS: http://www.sae.org