FEDERAL SUPPLY CLASS
5306

RATIONALE

CORRECT TYPOGRAPHICAL ERROR IN HEAD HEIGHT DIMENSION, FIGURE 1 REDRAWN TO SHOW FULL SHANK PART AND UPDATE TO ASME Y14.5-2018, REVISE LEAD THREAD CHAMFER TO AS1132, REVISE HEAD TO SHANK FILLET RADIUS TO CR, ADD EDGE DISTANCE EXCEPTION FOR HEAD MARKING, GENERAL EDITORIAL UPDATES.

NOTICE

THE INITIAL SAE PUBLICATION OF THIS DOCUMENT WAS TAKEN DIRECTLY FROM U.S. MILITARY STANDARD MS9588D, AMENDMENT 1. THIS SAE STANDARD MAY RETAIN THE SAME PART NUMBERS ESTABLISHED BY THE ORIGINAL MILITARY DOCUMENT.

ANY REQUIREMENTS ASSOCIATED WITH QUALIFIED PRODUCTS LISTS (QPL'S) MAY CONTINUE TO BE MANDATORY FOR DoD CONTRACTS. REQUIREMENTS RELATING TO QPL'S HAVE NOT BEEN ADOPTED BY THE SAE FOR THIS STANDARD AND ARE NOT PART OF THIS SAE DOCUMENT.

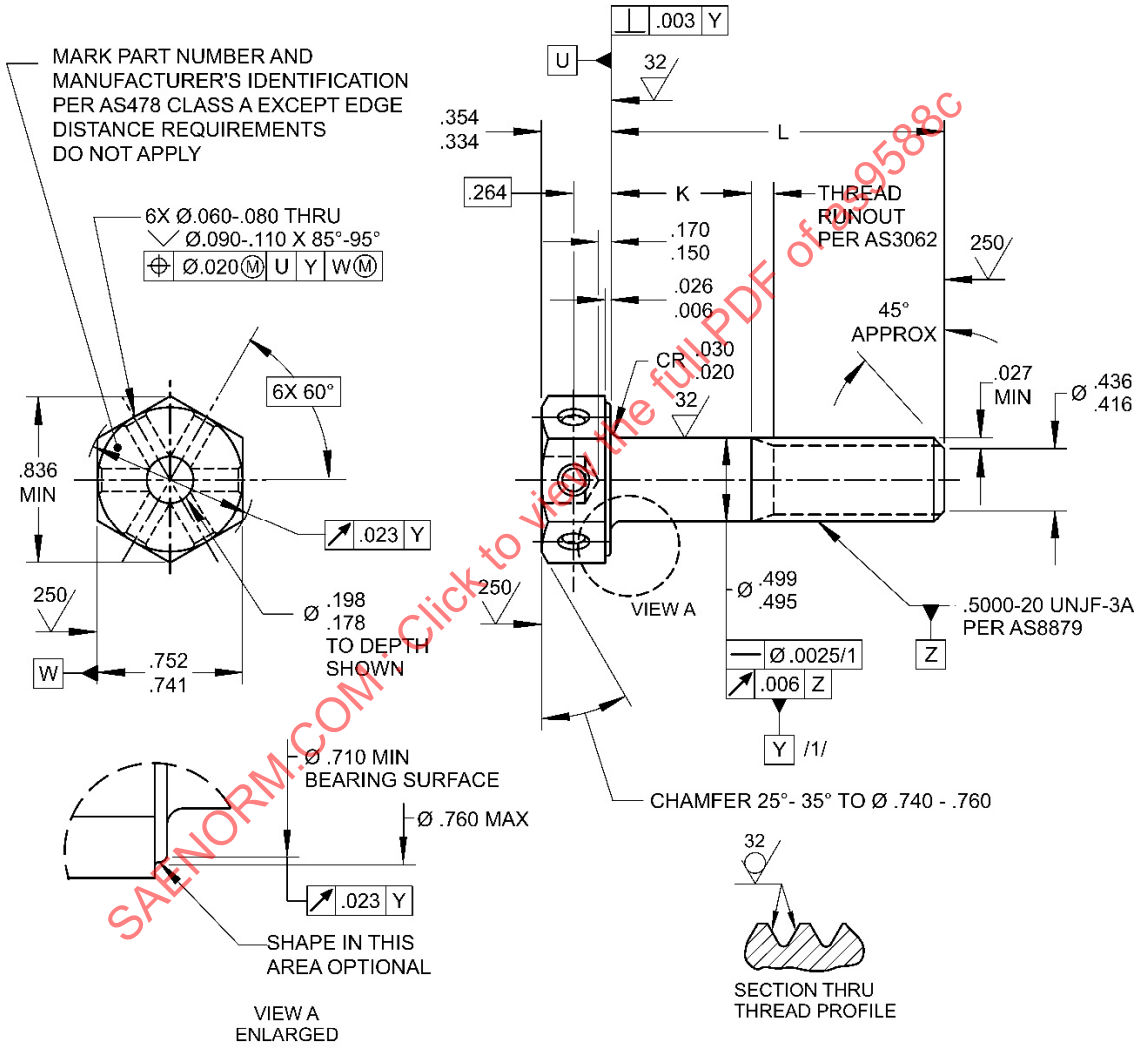

FIGURE 1 - BOLT

For more information on this standard, visit
https://www.sae.org/standards/content/AS9588C/

THIRD ANGLE PROJECTION

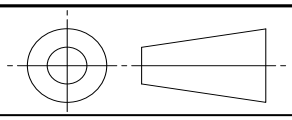

ISSUED 1998-11 REAFFIRMED 2007-06 REVISED 2022-03

CUSTODIAN: E-25

PROCUREMENT SPECIFICATION: AS7477

SAE INTERNATIONAL

AEROSPACE STANDARD

BOLT, MACHINE - HEXAGON HEAD, DRILLED, 6 HOLES, FULL SHANK, UNS S66286, 130 KSI MIN, .5000-20 UNJF-3A

AS9588™
SHEET 1 OF 2

REV. C

SAE Executive Standards Committee Rules provide that: " This report is published by SAE to advance the state of technical and engineering sciences. The use of this report is entirely voluntary, and its applicability and suitability for any particular use, including any patent infringement arising therefrom, is the sole responsibility of the user."

SAE reviews each technical report at least every five years at which time it may be revised, reaffirmed, stabilized, or cancelled. SAE invites your written comments and suggestions.

SAENORM.COM : Click to view the full PDF of as9588c

Copyright © 2022 SAE International
All rights reserved. No part of this publication may be reproduced, stored in a retrieval system or transmitted, in any form or by any means, electronic, mechanical, photocopying, recording, or otherwise, without the prior written permission of SAE.
TO PLACE A DOCUMENT ORDER: Tel: 877-606-7323 (inside USA and Canada) Tel: +1 724-776-4970 (outside USA)
Fax: 724-776-0790 Email: CustomerService@sae.org SAE WEB ADDRESS: http://www.sae.org