REV. B

AS9294

FEDERAL SUPPLY CLASS
5306

RATIONALE

ADD Ø TO STRAIGHTNESS FEATURE CONTROL FRAME, ADD MARKING EDGE DISTANCE NOTE, UPDATE POSITION FEATURE CONTROL FRAME, UPDATE DRAWING NOTE 4, AND GENERAL EDITORIAL UPDATE.

NOTICE

THE INITIAL SAE PUBLICATION OF THIS DOCUMENT WAS TAKEN DIRECTLY FROM U.S. MILITARY STANDARD MS9294, AMENDMENT 1. THIS SAE STANDARD RETAINS THE SAME PART NUMBERS ESTABLISHED BY THE ORIGINAL MILITARY DOCUMENT.

ANY REQUIREMENTS ASSOCIATED WITH QUALIFIED PRODUCTS LISTS (QPL) MAY CONTINUE TO BE MANDATORY FOR DOD CONTRACTS. REQUIREMENTS RELATING TO QPL'S HAVE NOT BEEN ADOPTED BY THE SAE FOR THIS STANDARD AND ARE NOT PART OF THIS SAE DOCUMENT.

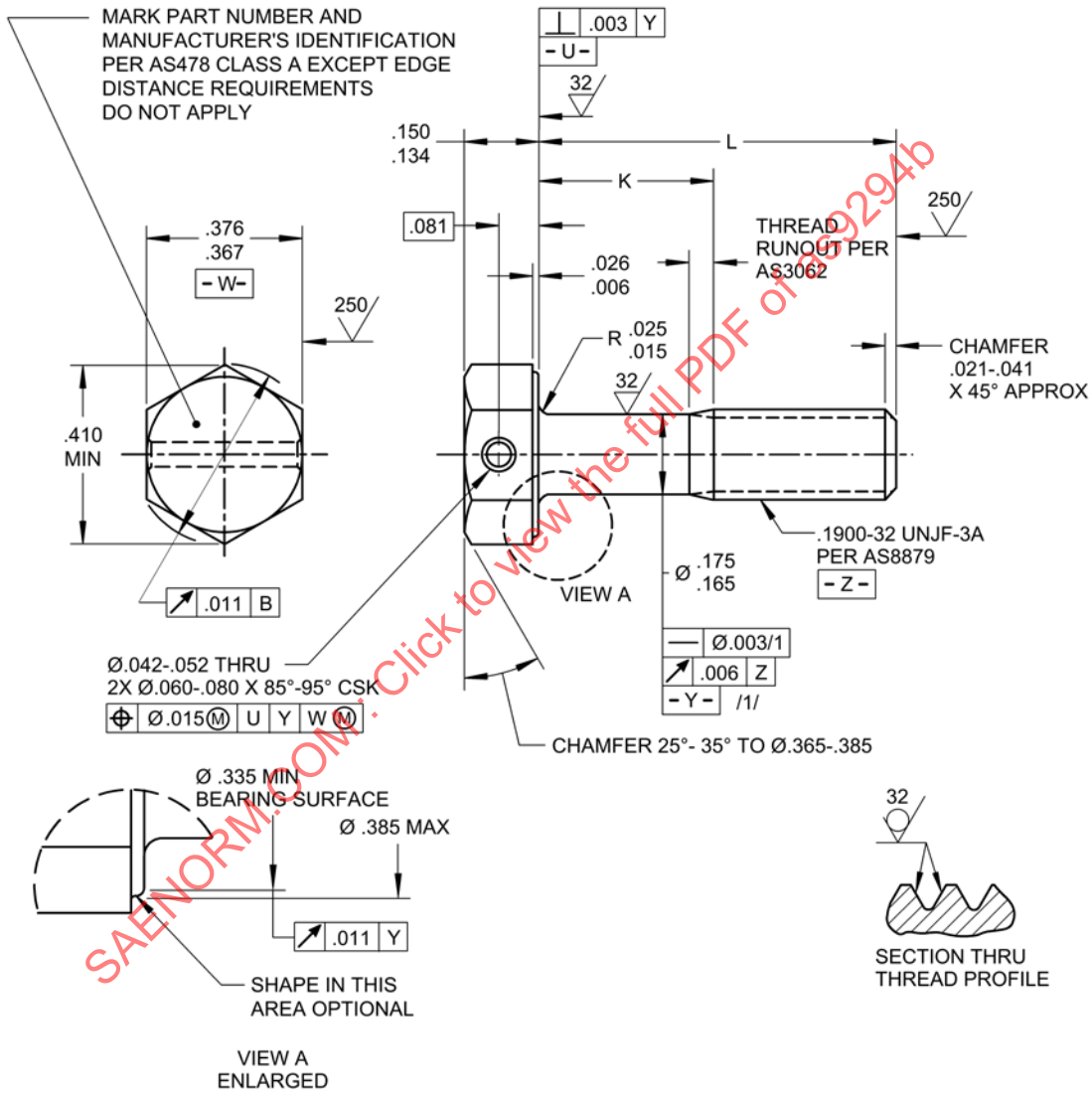

FIGURE 1 - BOLT

SAENORM.COM : Click to view the full PDF of as9294b

SAE values your input. To provide feedback on this Technical Report, please visit http://www.sae.org/technical/standards/AS9294B

THIRD ANGLE PROJECTION

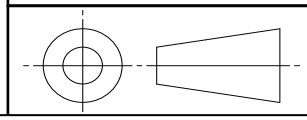

ISSUED 2000-08 REAFFIRMED 2004-07 REVISED 2015-06

CUSTODIAN: E-25

PROCUREMENT SPECIFICATION: AS7452 /3/

SAE INTERNATIONAL

AEROSPACE STANDARD

BOLT, MACHINE - HEXAGON HEAD, DRILLED
1 HOLE, PD SHANK, BLACK OXIDE, STEEL
UNS G87400, 125 KSI MIN, .1900-32 UNJF-3A

AS9294
SHEET 1 OF 2

REV. B

SAE Technical Standards Board Rules provide that: "This report is published by SAE to advance the state of technical and engineering sciences. The use of this report is entirely voluntary, and its applicability and suitability for any particular use, including any patent infringement arising therefrom, is the sole responsibility of the user."

SAE reviews each technical report at least every five years at which time it may be revised, reaffirmed, stabilized, or cancelled. SAE invites your written comments and suggestions.

Copyright 2015 SAE International
All rights reserved. No part of this publication may be reproduced, stored in a retrieval system or transmitted, in any form or by any means, electronic, mechanical, photocopying, recording, or otherwise, without the prior written permission of SAE.

TO PLACE A DOCUMENT ORDER: **Tel: 877-606-7323 (inside USA and Canada)** **Fax: 724-776-0790** **Tel: +1 724-776-4970 (outside USA)** **Email: CustomerService@sae.org** **SAE WEB ADDRESS: http://www.sae.org**