FEDERAL SUPPLY CLASS
5306

RATIONALE

UPDATE THREAD SPECIFICATION TO AS8879, UPDATE TO ANSI Y14.5M-1982, REVISE FPI REQUIREMENTS TO ASTM E1417/E1417M, ADD EDGE DISTANCE EXCEPTION FOR HEAD MARKING, REVISE ACROSS POINTS DIMENSION, ADD AS3062 FOR THREAD RUNOUT, FIGURE 1 REDRAWN, UPDATE REFERENCES, AND GENERAL EDITORIAL UPDATE.

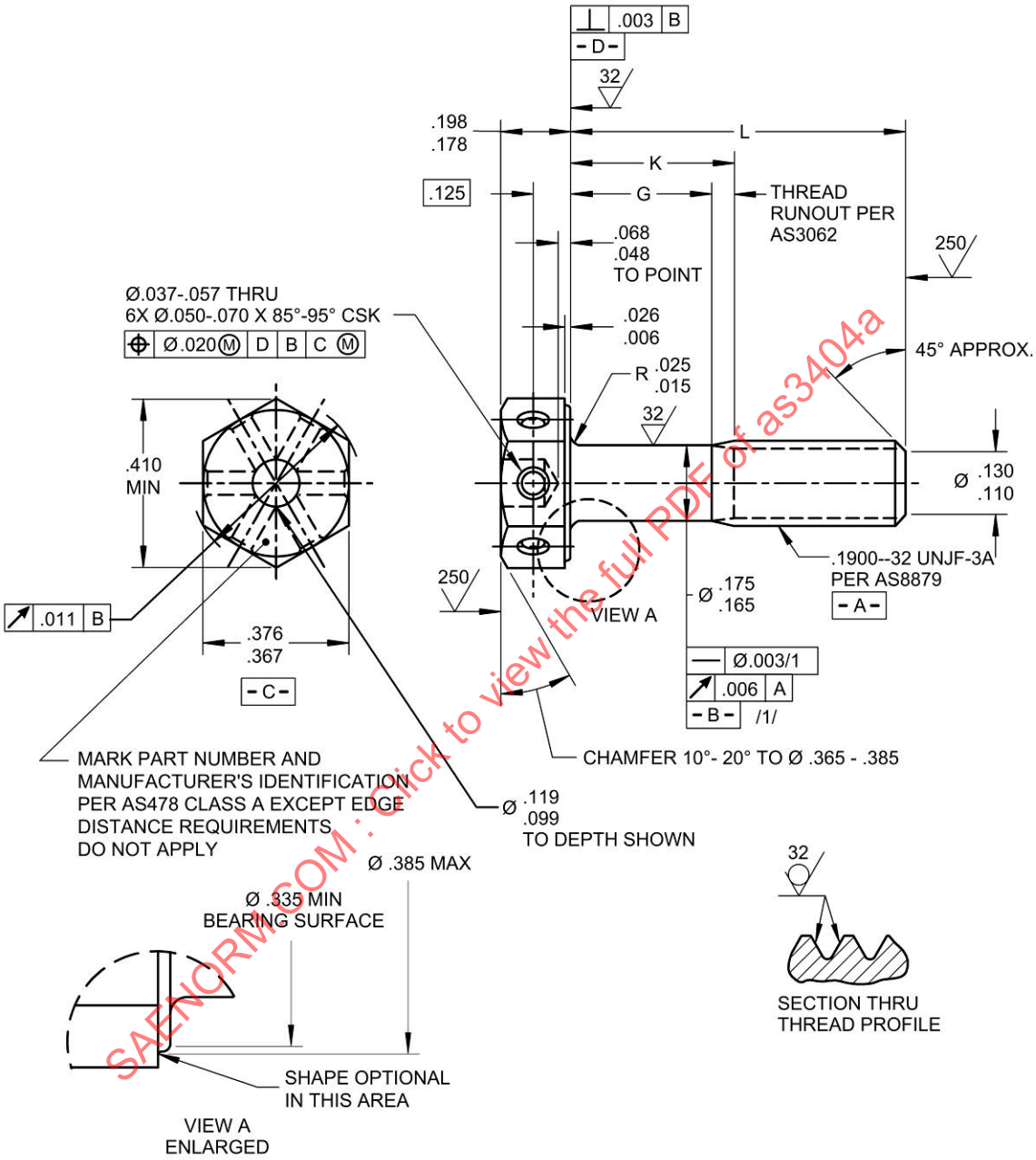

FIGURE 1 - BOLT

SAENORM.COM : Click to view the full PDF of as3404a

SAE values your input. To provide feedback on this Technical Report, please visit http://www.sae.org/technical/standards/AS3404A

THIRD ANGLE PROJECTION

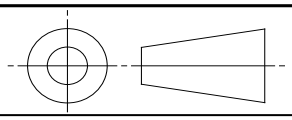

ISSUED 1985-08 REAFFIRMED 2006-10 REVISED 2015-08

CUSTODIAN: E-25

PROCUREMENT SPECIFICATION: AS7471

SAE INTERNATIONAL

AEROSPACE STANDARD

BOLT, MACHINE - HEXAGON HEAD,
DRILLED 6 HOLES, PD SHANK,
AMS5708 (UNS N07001), .1900-32 UNJF-3A

AS3404™
SHEET 1 OF 2

REV. A

SAE Technical Standards Board Rules provide that: "This report is published by SAE to advance the state of technical and engineering sciences. The use of this report is entirely voluntary, and its applicability and suitability for any particular use, including any patent infringement arising therefrom, is the sole responsibility of the user."

SAE reviews each technical report at least every five years at which time it may be revised, reaffirmed, stabilized, or cancelled. SAE invites your written comments and suggestions.

Copyright 2015 SAE International
All rights reserved. No part of this publication may be reproduced, stored in a retrieval system or transmitted, in any form or by any means, electronic, mechanical, photocopying, recording, or otherwise, without the prior written permission of SAE.

TO PLACE A DOCUMENT ORDER: **Tel: 877-606-7323 (inside USA and Canada)** **Tel: +1 724-776-4970 (outside USA)**
Fax: 724-776-0790 **Email: CustomerService@sae.org** **SAE WEB ADDRESS: http://www.sae.org**