FEDERAL SUPPLY CLASS
5306

RATIONALE

THIS DOCUMENT HAS BEEN REAFFIRMED TO COMPLY WITH THE SAE 5-YEAR REVIEW POLICY.

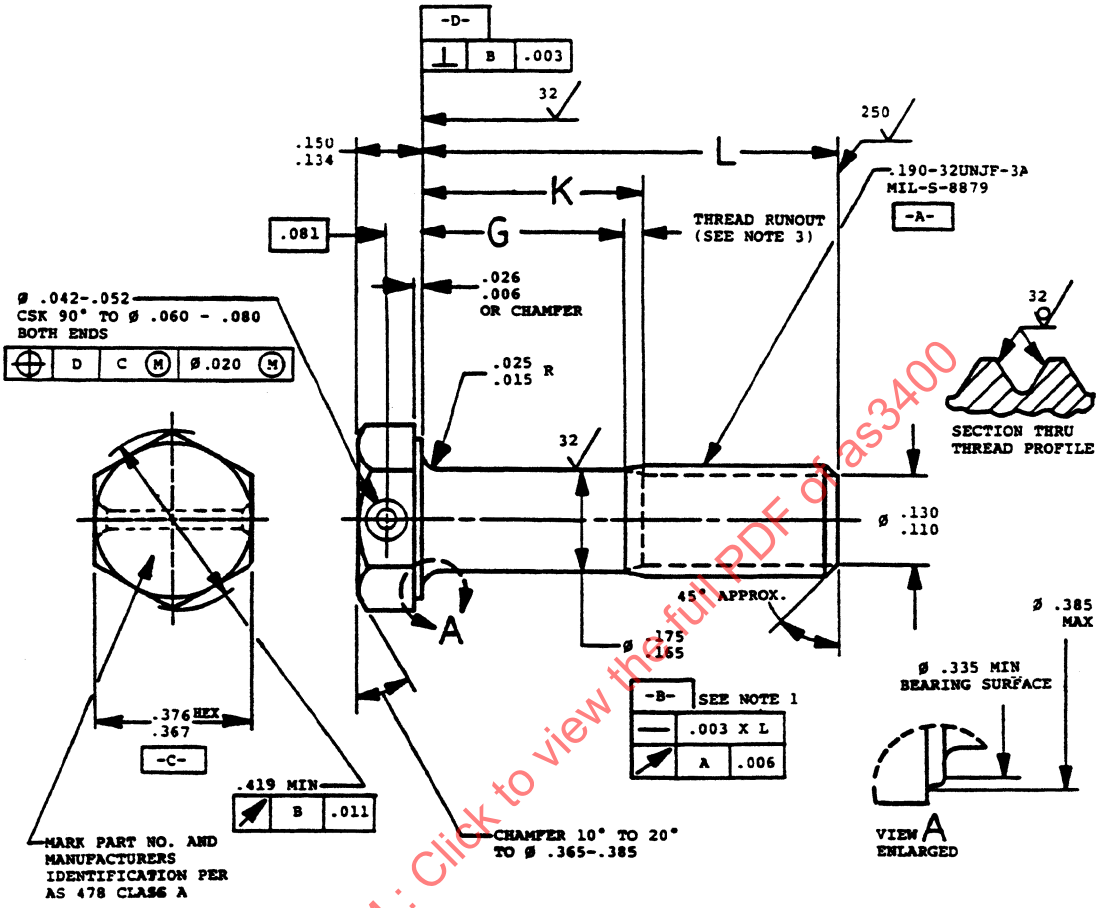

SAENORM.COM : Click to view the full PDF of as3400

1. FOR PART NUMBERS AS3400-03 THRU AS3400-14 THE THREAD PD SHALL REPLACE DATUM -B-.
2. MATERIAL: CORROSION AND HEAT RESISTANT NICKEL ALLOY AMS 5708.
3. MANUFACTURING SPECIFICATION: AMS 7471.
4. FLUORESCENT PENETRANT INSPECTION PER AMS 2645.
5. SURFACE TEXTURE: SYMBOLS PER ANSI Y14.36-1978; REQUIREMENTS PER ANSI B46.1-1978. UNLESS OTHERWISE SPECIFIED, SURFACES TO BE 125 MICROINCHES Ra. EXCEPT UPSET HEAD TO BE 250 MICROINCHES Ra.
6. BREAK SHARP EDGES .003-.015 UNLESS OTHERWISE SPECIFIED.
7. DIMENSIONS IN INCHES. UNLESS OTHERWISE SPECIFIED, TOLERANCES: ANGULAR DIMENSIONS ±5°.
8. DIMENSIONS AND TOLERANCING ANSI Y14.5-1973.
9. DO NOT USE UNASSIGNED PART NUMBERS.

ISSUED 1985-08 REAFFIRMED 2006-05

PREPARED BY SAE COMMITTEE E-25, GENERAL STANDARDS FOR AEROSPACE PROPULSION SYSTEMS

SAE Aerospace
An SAE International Group

AEROSPACE STANDARD

BOLT, MACHINE - HEXAGON HEAD, DRILLED 1 HOLE, PD SHANK, AMS 5708, .190-32 UNJF-3A

AS3400
SHEET 1 OF 2

SAE Technical Standards Board Rules provide that: "This report is published by SAE to advance the state of technical and engineering sciences. The use of this report is entirely voluntary, and its applicability and suitability for any particular use, including any patent infringement arising therefrom, is the sole responsibility of the user."

SAE reviews each technical report at least every five years at which time it may be reaffirmed, revised, or cancelled. SAE invites your written comments and suggestions.

Copyright 2006 SAE International
All rights reserved. No part of this publication may be reproduced, stored in a retrieval system or transmitted, in any form or by any means, electronic, mechanical, photocopying, recording, or otherwise, without the prior written permission of SAE.
TO PLACE A DOCUMENT ORDER: Tel: 877-606-7323 (inside USA and Canada) Tel: 724-776-4970 (outside USA)
Fax: 724-776-0790 Email: CustomerService@sae.org SAE WEB ADDRESS: http://www.sae.org