FED SUPPLY CLASS
5307

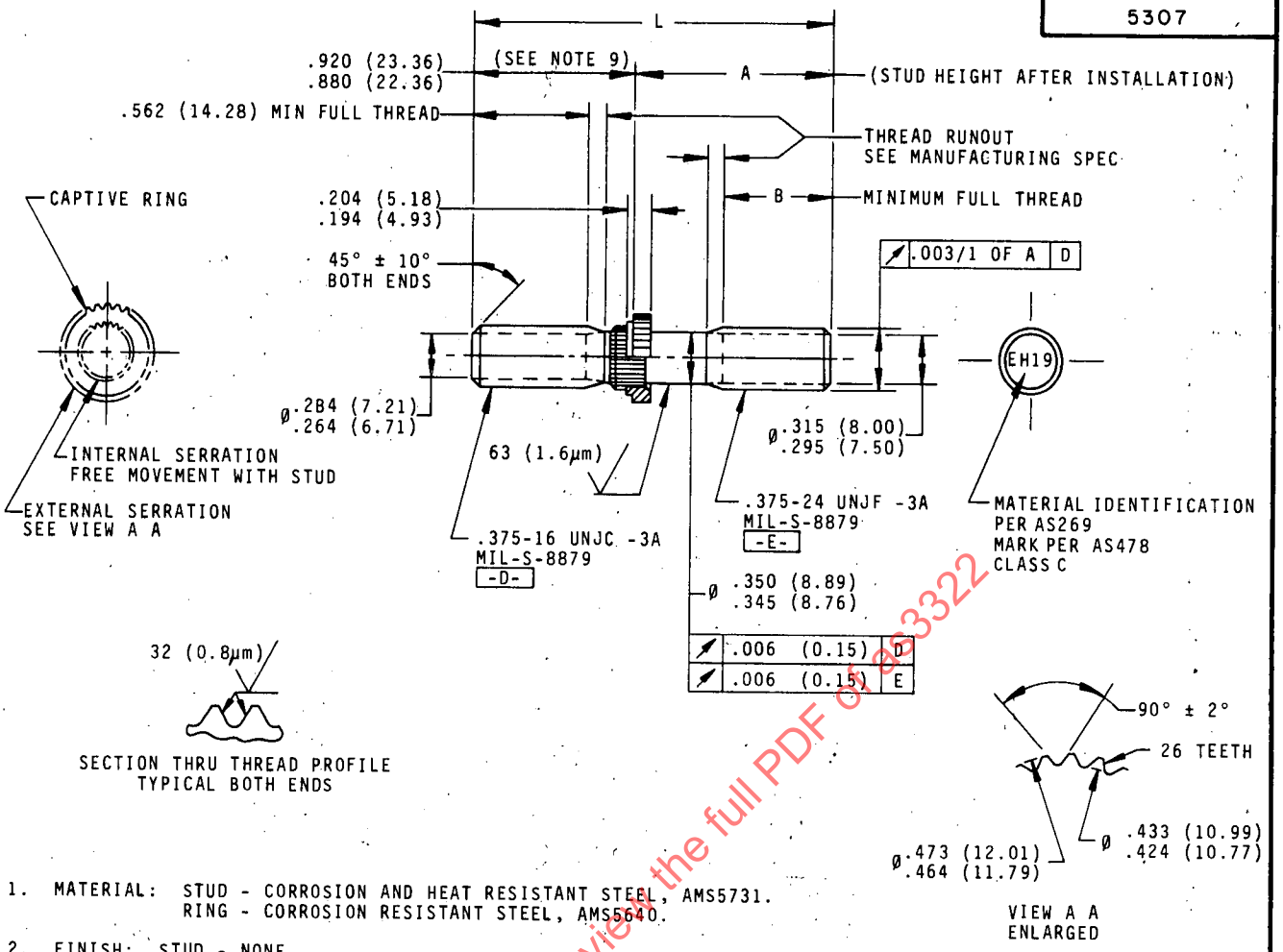

1. MATERIAL: STUD - CORROSION AND HEAT RESISTANT STEEL, AMS5731.
   RING - CORROSION RESISTANT STEEL, AMS5640.

2. FINISH: STUD - NONE.
   RING - NONE.

3. MANUFACTURING SPECIFICATION: AMS7482, EXCEPT STRESS RUPTURE TEST IS WAIVED, AND STUD END THREAD REQUIREMENTS OF AS3062, INCOMPLETE LEAD AND RUNOUT THREADS, IS NOT APPLICABLE.

4. FLUORESCENT PENETRANT INSPECTION PER AMS2645. EXCEPT RING.

5. SURFACE TEXTURE: SYMBOLS PER ANSI Y14.36-1978, REQUIREMENTS PER ANSI B46.1-1978. UNLESS OTHERWISE SPECIFIED, SURFACES TO BE 125 MICROINCHES (3.2 MICROMETRES).

6. DIMENSIONING AND TOLERANCING: ANSI Y14.5-1973.

7. BREAK SHARP EDGES .003-.015 (0.08-0.38) UNLESS OTHERWISE SPECIFIED.

8. DIMENSIONS IN INCHES, (MILLIMETRES), METRIC CONVERSIONS IN PARENTHESIS ARE IN INTERNATIONAL SYSTEMS UNITS (SI).

9. DIMENSIONS APPLY WHEN LOCKRING IS AGAINST STOP TOWARD .375-24 THREAD.

10. MARK AEROSPACE STANDARD IDENTIFICATION NUMBER AND MANUFACTURER'S IDENTIFICATION ON CONTAINER.

11. DO NOT USE UNASSIGNED AEROSPACE STANDARD IDENTIFICATION NUMBERS.

12. INSTALLATION SHALL BE IN ACCORDANCE WITH AS1561.

SOURCE OF SUPPLY
ROSAN, INC.
NEWPORT BEACH, CALIFORNIA 92663
MANUFACTURER'S CODE IDENTIFICATION NUMBER 83324
DRAWING NUMBER SFC-SUM SERIES

IDENTIFICATION OF THE APPROVED SOURCE (S) HEREON IS NOT TO BE CONSTRUED AS A GUARANTEE OF PRESENT OR CONTINUED AVAILABILITY AS A SOURCE OF SUPPLY FOR THE ITEMS DESCRIBED ON THIS DRAWING.

ONLY THE ITEM DESCRIBED ON THIS DRAWING WHEN PROCURED FROM THE VENDOR LISTED HEREON IS APPROVED FOR USE IN THE APPLICATIONS SPECIFYING THIS AEROSPACE STANDARD IDENTIFICATION NUMBER. A SUBSTITUTE ITEM SHALL NOT BE USED WITHOUT PRIOR TESTING AND APPROVAL BY THE DESIGN ACTIVITY RESPONSIBLE FOR THE APPLICATION.

THIRD ANGLE PROJECTION

Issued 9-15-79 Revised

Prepared By SAE COMMITTEE E-25, Engine & Propeller Standard Utility Parts

Society of Automotive Engineers, Inc.
400 COMMONWEALTH DRIVE, WARRENDALE, PA. 15096

AEROSPACE STANDARD IDENTIFICATION

STUD-STRAIGHT, RING LOCKED, CRES AMS5731
.375-16 UNJC X .375-24 UNJF

SOURCE CONTROL DRAWING

AS3322

SHEET 1 OF 2

SAE Technical Board rules provide that: "All technical reports, including standards approved and practices recommended, are advisory only. Their use by anyone engaged in industry or trade is entirely voluntary. There is no agreement to adhere to any SAE standard or recommended practice, and no commitment to conform to or be guided by any technical report. In formulating and approving technical reports, the Board and its Committees will not investigate or consider patents which may apply to the subject matter. Prospective users of the report are responsible for protecting themselves against liability for infringement of patents."

SAENORM.COM : Click to view the full PDF of as3322