FEDERAL SUPPLY CLASS
5315

RATIONALE

THIS DOCUMENT HAS BEEN REAFFIRMED TO COMPLY WITH THE SAE 5-YEAR REVIEW POLICY.

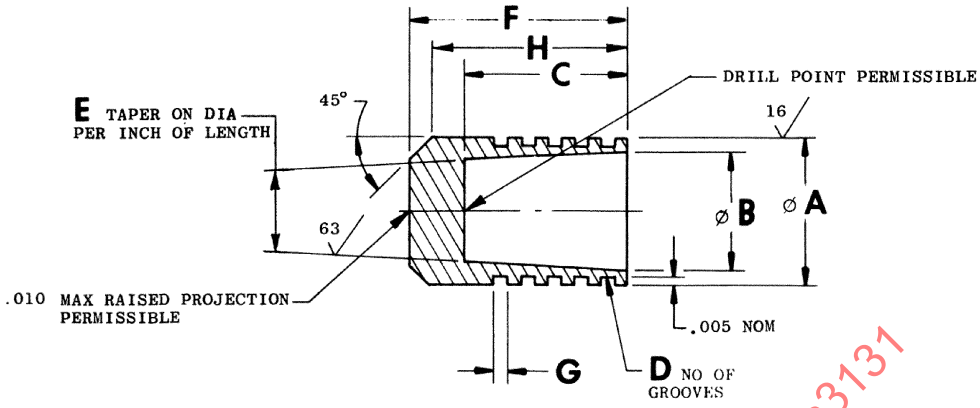

STANDARD DIA			
AEROSPACE STANDARD IDENT NUMBER	VENDOR NUMBER	A	APPROX MASS LB/100
AS3131-01	PLGA0935030	.0928-.0937	.011
AS3131-02	PLGA1255030	.1241-.1250	.022
AS3131-03	PLGA1565030	.1553-.1562	.040
AS3131-04	PLGA1875030	.1866-.1875	.056
AS3131-05	PLGA2185030	.2178-.2187	.088
AS3131-06	PLGA2505030	.2491-.2500	.129
AS3131-07	PLGA2815030	.2803-.2812	.178
AS3131-08	PLGA3435030	.3428-.3437	.289
AS3131-09	PLGA4065030	.4053-.4062	.462
AS3131-10	PLGA4685030	.4678-.4687	.568
AS3131-11	PLGA5315030	.5303-.5312	.986
AS3131-12	PLGA6565030	.6553-.6562	1.675

.010 OVERSIZE DIA			
AEROSPACE STANDARD IDENT NUMBER	VENDOR NUMBER	A	APPROX MASS LB/100
AS3131-51	PLGA1035030	.1028-.1037	.013
AS3131-52	PLGA1355030	.1341-.1350	.029
AS3131-53	PLGA1665030	.1653-.1662	.047
AS3131-54	PLGA1975030	.1966-.1975	.068
AS3131-55	PLGA2285030	.2278-.2287	.108
AS3131-56	PLGA2605030	.2591-.2600	.150
AS3131-57	PLGA2915030	.2903-.2912	.203
AS3131-58	PLGA3535030	.3528-.3537	.329
AS3131-59	PLGA4165030	.4153-.4162	.527
AS3131-60	PLGA4785030	.4778-.4787	.645
AS3131-61	PLGA5415030	.5403-.5412	1.080
AS3131-62	PLGA6665030	.6653-.6662	1.863

AEROSPACE STANDARD IDENT NUMBER	B NOM	C NOM	D	E NOM	F	G NOM	H
AS3131-01 & 51	.062	.069	3	.0417	.093-.102	.010	.070-.085
AS3131-02 & 52	.088	.104	4	.0417	.123-.132	.010	.100-.115
AS3131-03 & 53	.110	.090	4	.0417	.118-.132	.010	.100-.120
AS3131-04 & 54	.146	.128	4	.0417	.154-.166	.010	.128-.142
AS3131-05 & 55	.173	.157	5	.0417	.180-.194	.010	.157-.177
AS3131-06 & 56	.204	.183	4	.0417	.218-.232	.015	.184-.202
AS3131-07 & 57	.240	.205	5	.0313	.248-.262	.010	.220-.240
AS3131-08 & 58	.300	.242	5	.0208	.300-.314	.020	.262-.282
AS3131-09 & 59	.358	.279	12	.0208	.358-.372	.010	.295-.315
AS3131-10 & 60	.428	.305	6	.0208	.383-.397	.020	.320-.340
AS3131-11 & 61	.486	.410	8	.0156	.513-.527	.020	.445-.475
AS3131-12 & 62	.592	.425	9	.0182	.543-.557	.020	.460-.480

THIRD ANGLE PROJECTION

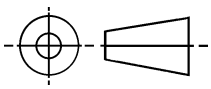

ISSUED 1981-02 REAFFIRMED 2006-05

PREPARED BY SAE COMMITTEE E-25, GENERAL STANDARDS FOR AEROSPACE PROPULSION SYSTEMS

SOURCE CONTROL DRAWING

SAE Aerospace
An SAE International Group

AEROSPACE STANDARD

PLUG, EXPANSION - CRES, 303, SHORT;
STD AND .010 OVERSIZE DIAMETERS

AS3131
SHEET 1 OF 2

SAE Technical Standards Board Rules provide that: "This report is published by SAE to advance the state of technical and engineering sciences. The use of this report is entirely voluntary, and its applicability and suitability for any particular use, including any patent infringement arising therefrom, is the sole responsibility of the user."

SAE reviews each technical report at least every five years at which time it may be reaffirmed, revised, or cancelled. SAE invites your written comments and suggestions.

SAENORM.COM : Click to view the full PDF of as3131

Copyright 2006 SAE International
All rights reserved. No part of this publication may be reproduced, stored in a retrieval system or transmitted, in any form or by any means, electronic, mechanical, photocopying, recording, or otherwise, without the prior written permission of SAE.
TO PLACE A DOCUMENT ORDER: Tel: 877-606-7323 (inside USA and Canada) Tel: 724-776-4970 (outside USA)
Fax: 724-776-0790 Email: CustomerService@sae.org SAE WEB ADDRESS: http://www.sae.org