FEDERAL SUPPLY CLASS
5340

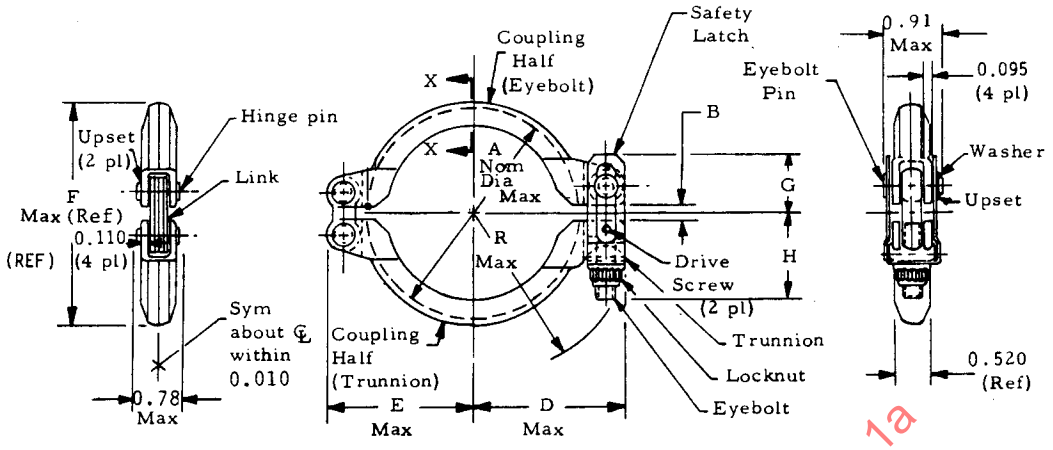

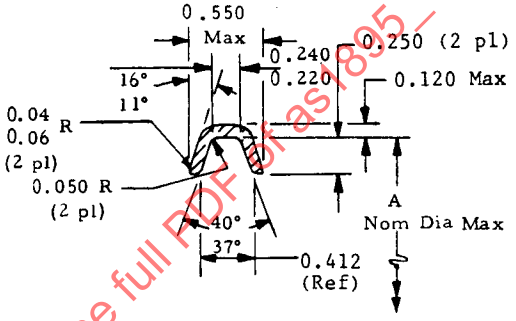

SECTION X - X
SCALE: NONE

PART NUMBER	NOM TUBE SIZE	A NOM DIA MAX	B MIN	D MAX	E MAX	F MAX (REF)	G MAX	H MAX	R MAX	MAX WT (LBS)
AS1895/1-150	1.50	2.385	0.150	1.843	1.780	2.656	0.968	1.410	2.126	0.37
AS1895/1-175	1.75	2.635	0.150	1.880	1.857	2.906	0.875	1.425	2.250	0.38
AS1895/1-200	2.00	2.885	0.175	2.093	2.030	3.156	0.898	1.450	2.360	0.39
AS1895/1-225	2.25	3.135	0.175	2.130	2.107	3.406	0.898	1.450	2.485	0.41
AS1895/1-250	2.50	3.385	0.190	2.343	2.280	3.656	0.925	1.475	2.569	0.44
AS1895/1-275	2.75	3.635	0.190	2.468	2.410	3.906	0.984	1.525	2.700	0.46
AS1895/1-300	3.00	3.885	0.190	2.593	2.530	4.156	1.000	1.550	2.824	0.50
AS1895/1-325	3.25	4.135	0.190	2.630	2.607	4.406	1.024	1.575	2.950	0.50
AS1895/1-350	3.50	4.385	0.190	3.843	2.780	4.656	1.059	1.550	3.058	0.59
AS1895/1-400	4.00	4.885	0.400	3.015	2.972	5.156	1.024	1.575	3.263	0.54
AS1895/1-450	4.50	5.385	0.450	3.265	3.222	5.656	1.109	1.600	3.519	0.59
AS1895/1-500	5.00	5.885	0.500	3.520	3.467	6.156	1.074	1.625	3.732	0.67
AS1895/1-550	5.50	6.385	0.550	3.765	3.722	6.656	1.149	1.650	3.970	0.72
AS1895/1-600	6.00	6.885	0.600	4.015	3.972	7.156	1.400	1.675	4.208	0.76

SHEET	1	2
REV.	A	A

ISSUED 12-85 REVISED (A) 2-88

CUSTODIAN: SAE G-3/G-3A

PROCUREMENT: AS1895

SAE The Engineering Society For Advancing Mobility Land Sea Air and Space®
400 Commonwealth Drive
Warrendale, PA 15096

AEROSPACE STANDARD

COUPLING, TYPE 1
(STANDARD PROFILE)

AS 1895/1

SHEET 1 OF 2

SAE Technical Board Rules provide that: "This report is published by SAE to advance the state of technical and engineering sciences. The use of this report is entirely voluntary, and its applicability and suitability for any particular use, including any patent infringement arising therefrom, is the sole responsibility of the user."
SAE reviews each technical report at least every five years at which time it may be reaffirmed, revised, or cancelled. SAE invites your written comments and suggestions.

SAENORM.COM : Click to view the full PDF of as1895_1a

Copyright 1988 by Society of Automotive Engineers, Inc.
All rights reserved.

Printed in U.S.A.