FEDERAL SUPPLY CLASS
5307

RATIONALE

STANDARD UPDATED TO CURRENT PRACTICES AND SCREW THREAD STANDARD ADDED.

THE INITIAL SAE PUBLICATION OF THIS DOCUMENT WAS TAKEN FROM U. S. MILITARY STANDARD AN151401 THRU AN151700 REVISION 2, NOTICE 1. THIS SAE STANDARD RETAINS THE SAME PART NUMBERS ESTABLISHED BY THE ORIGINAL DOCUMENT.

ANY REQUIREMENTS ASSOCIATED WITH QUALIFIED PRODUCTS LISTS (QPL) MAY CONTINUE TO BE MANDATORY FOR DOD CONTRACTS. REQUIREMENTS RELATING TO QPL'S HAVE NOT BEEN ADOPTED BY THE SAE FOR THIS STANDARD AND ARE NOT PART OF THIS SAE DOCUMENT.

WARNING

THIS DOCUMENT INCLUDES CADMIUM AS A PLATING MATERIAL. THE USE OF CADMIUM HAS BEEN RESTRICTED AND/OR BANNED FOR USE IN MANY COUNTRIES DUE TO ENVIRONMENTAL AND HEALTH CONCERNS. THE USER SHOULD CONSULT WITH LOCAL OFFICIALS ON THE ENVIRONMENTAL AND HEALTH REGULATIONS REGARDING ITS USE.

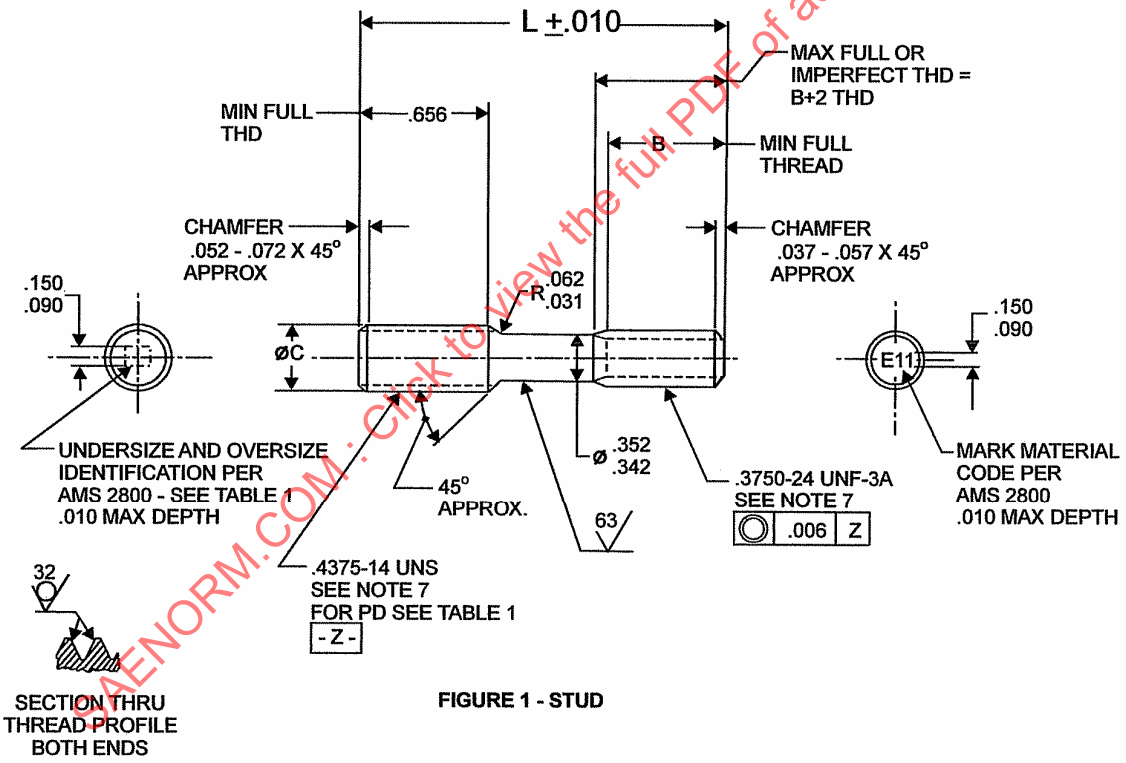

FIGURE 1 - STUD

SAENORM.COM : Click to view the full PDF of as151401a

THIRD ANGLE PROJECTION

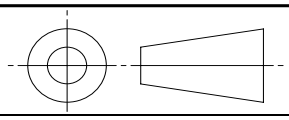

ISSUED 1998-10 REVISED 2006-05

CUSTODIAN: SAE E-25

SAE Aerospace
An SAE International Group

AEROSPACE STANDARD

(R) STUD, STEPPED, 1.5 DIA ENGAGEMENT, CADMIUM PLATED, STEEL UNS G87400, .4375-14 UNS X .3750-24 UNF-3A

AS151401 THRU AS151700
SHEET 1 OF 2

REV. A

SAE Technical Standards Board Rules provide that: "This report is published by SAE to advance the state of technical and engineering sciences. The use of this report is entirely voluntary, and its applicability and suitability for any particular use, including any patent infringement arising therefrom, is the sole responsibility of the user."

SAE reviews each technical report at least every five years at which time it may be reaffirmed, revised, or cancelled. SAE invites your written comments and suggestions.

Copyright 2006 SAE International
All rights reserved. No part of this publication may be reproduced, stored in a retrieval system or transmitted, in any form or by any means, electronic, mechanical, photocopying, recording, or otherwise, without the prior written permission of SAE.
TO PLACE A DOCUMENT ORDER: Tel: 877-606-7323 (inside USA and Canada) Tel: 724-776-4970 (outside USA)
Fax: 724-776-0790 Email: CustomerService@sae.org SAE WEB ADDRESS: http://www.sae.org