FEDERAL SUPPLY CLASS
5305

RATIONALE

CURRENT REVISON IS LIMITED IN SCOPE. UPDATE NOTICE FOR CONVERTED MILTARY STANDARDS AND ADD CADMIUM PLATE NOTICE.

NOTICE

THE INITIAL SAE PUBLICATION OF THIS DOCUMENT WAS TAKEN DIRECTLY FROM U.S. MILITARY STANDARD AN117041 THRU AN117080 REV. 1. THIS SAE STANDARD MAY RETAIN THE SAME PART NUMBERS ESTABLISHED BY THE ORIGINAL MILITARY DOCUMENT.

ANY REQUIREMENTS ASSOCIATED WITH QUALIFIED PRODUCTS LISTS (QPL) MAY CONTINUE TO BE MANDATORY FOR DOD CONTRACTS. REQUIREMENTS RELATING TO QPLS HAVE NOT BEEN ADOPTED BY THE SAE FOR THIS STANDARD AND ARE NOT PART OF THIS SAE DOCUMENT.

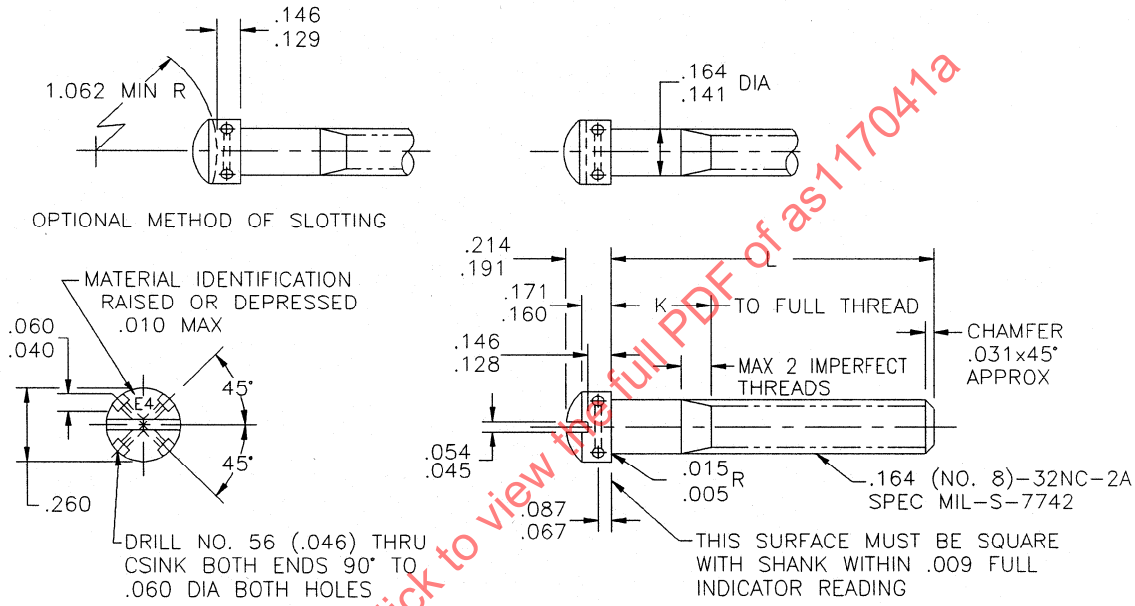

FIGURE 1 - SCREW

SAENORM.COM : Click to view the full PDF of as117041a

SAE values your input. To provide feedback on this Technical Report, please visit http://www.sae.org/technical/standards/AS117041A

THIRD ANGLE PROJECTION

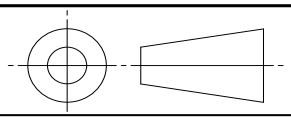

ISSUED 2000-08 REAFFIRMED 2005-05 REVISED 2011-08

CUSTODIAN: E-25

SAE Aerospace
An SAE International Group

AEROSPACE STANDARD

SCREW – OVAL FILLISTER DRILLED HEAD, .164-32

SAE AS117041 THRU AS117080
SHEET 1 OF 2

REV. A

SAE Technical Standards Board Rules provide that: "This report is published by SAE to advance the state of technical and engineering sciences. The use of this report is entirely voluntary, and its applicability and suitability for any particular use, including any patent infringement arising therefrom, is the sole responsibility of the user."

SAE reviews each technical report at least every five years at which time it may be reaffirmed, revised, or cancelled. SAE invites your written comments and suggestions.

Copyright 2011 SAE International
All rights reserved. No part of this publication may be reproduced, stored in a retrieval system or transmitted, in any form or by any means, electronic, mechanical, photocopying, recording, or otherwise, without the prior written permission of SAE.
TO PLACE A DOCUMENT ORDER: Tel: 877-606-7323 (inside USA and Canada) Fax: 724-776-0790 Tel: +1 724-776-4970 (outside USA) Email: CustomerService@sae.org SAE WEB ADDRESS: http://www.sae.org