TECHNICAL REPORT

ISO/ASTM TR 52912

First edition
2020-09

Additive manufacturing — Design — Functionally graded additive manufacturing

Fabrication additive — Conception — Fabrication additive à gradient fonctionnel

STANDARDSISO.COM : Click to view the full PDF of ISO/ASTM TR 52912:2020

Reference number
ISO/ASTM TR 52912:2020(E)

© ISO/ASTM International 2020

STANDARDSISO.COM : Click to view the full PDF of ISO/ASTM TR 52912:2020

COPYRIGHT PROTECTED DOCUMENT

© ISO/ASTM International 2020

All rights reserved. Unless otherwise specified, or required in the context of its implementation, no part of this publication may be reproduced or utilized otherwise in any form or by any means, electronic or mechanical, including photocopying, or posting on the internet or an intranet, without prior written permission. Permission can be requested from either ISO at the address below or ISO's member body in the country of the requester. In the United States, such requests should be sent to ASTM International.

ISO copyright office
CP 401 • Ch. de Blandonnet 8
CH-1214 Vernier, Geneva
Phone: +41 22 749 01 11

Email: copyright@iso.org
Website: www.iso.org

ASTM International
100 Barr Harbor Drive, PO Box C700
West Conshohocken, PA 19428-2959, USA
Phone: +610 832 9634
Fax: +610 832 9635
Email: khooper@astm.org
Website: www.astm.org

Published in Switzerland

Contents

Page

Foreword ... **iv**
Introduction ... **v**
1 Scope ... **1**
2 Normative references ... **1**
3 Terms and definitions ... **1**
4 Abreviations ... **1**
5 Concept of Functionally Graded Additive Manufacturing (FGAM) ... **3**
5.1 General ... 3
5.2 Homogeneous compositions — Single Material FGAM ... 3
5.3 Heterogeneous compositions — Multi-material FGAM ... 4
6 Advances of functionally graded additive manufacturing ... **8**
6.1 General ... 8
6.2 AM and FGAM process ... 8
6.3 Material extrusion ... 9
6.4 Powder bed fusion ... 12
6.5 Directed energy deposition ... 13
6.6 Sheet lamination ... 14
7 Current limitations of FGAM ... **16**
7.1 General ... 16
7.2 Material limitations ... 16
7.2.1 General ... 16
7.2.2 Defining the optimum material property distribution ... 17
7.2.3 Predicting the material properties of manufactured components ... 17
7.2.4 Material selection ... 17
7.2.5 Understanding differences and defining tolerances ... 17
7.3 Limitations of current additive manufacturing technologies ... 17
7.4 CAD Software limitations ... 18
7.4.1 General ... 18
7.4.2 Data exchange formats ... 19
8 Potential applications of FGAM ... **20**
8.1 General ... 20
8.2 Biomedical applications ... 21
8.3 Aerospace applications ... 21
8.4 Consumer markets ... 21
9 Summary ... **22**
Bibliography ... **23**

STANDARDSISO.COM : Click to view the full PDF of ISO/ASTM TR 52912:2020

© ISO/ASTM International 2020 – All rights reserved

Foreword

ISO (the International Organization for Standardization) is a worldwide federation of national standards bodies (ISO member bodies). The work of preparing International Standards is normally carried out through ISO technical committees. Each member body interested in a subject for which a technical committee has been established has the right to be represented on that committee. International organizations, governmental and non-governmental, in liaison with ISO, also take part in the work. ISO collaborates closely with the International Electrotechnical Commission (IEC) on all matters of electrotechnical standardization.

The procedures used to develop this document and those intended for its further maintenance are described in the ISO/IEC Directives, Part 1. In particular the different approval criteria needed for the different types of ISO documents should be noted. This document was drafted in accordance with the editorial rules of the ISO/IEC Directives, Part 2 (see www.iso.org/directives).

Attention is drawn to the possibility that some of the elements of this document may be the subject of patent rights. ISO shall not be held responsible for identifying any or all such patent rights. Details of any patent rights identified during the development of the document will be in the Introduction and/or on the ISO list of patent declarations received (see www.iso.org/patents).

Any trade name used in this document is information given for the convenience of users and does not constitute an endorsement.

For an explanation on the voluntary nature of standards, the meaning of ISO specific terms and expressions related to conformity assessment, as well as information about ISO's adherence to the World Trade Organization (WTO) principles in the Technical Barriers to Trade (TBT) see the following URL: www.iso.org/iso/foreword.html.

This document was prepared by ISO/TC 261, *Additive manufacturing*, in cooperation with ASTM F 42, *Additive manufacturing technologies*, on the basis of a partnership agreement between ISO and ASTM International with the aim to create a common set of ISO/ASTM standards on additive manufacturing and in collaboration with the European Committee for Standardization (CEN) Technical Committee CEN/TC 438, *Additive manufacturing*, in accordance with the agreement on technical cooperation between ISO and CEN (Vienna Agreement).

Any feedback or questions on this document should be directed to the user's national standards body. A complete listing of these bodies can be found at www.iso.org/members.html.

STANDARDSISO.COM : Click to view the full PDF of ISO/ASTM TR 52912:2020

 © ISO/ASTM International 2020 – All rights reserved

Introduction

Functionally Graded Materials (FGMs) were developed in 1984 for a space plane project to sustain high thermal barriers to overcome the shortcomings of traditional composite materials (AZO Materials, 2002). Traditional composites [Figure 1 a)] are homogeneous mixtures, therefore involving a compromise between the desirable properties of the component materials. Functionally Graded Materials (FGMs) are a class of advanced materials with spatially varying composition over a changing dimension, with corresponding changes in material properties built-in[56]. FGMs attain their multifunctional status by mapping performance requirements to strategies of material structuring and allocation [Figure 1 b)].

The manufacturing processes of conventional FGMs include shot peening, ion implantation, thermal spraying, electrophoretic deposition and chemical vapour deposition. Since additive manufacturing processes builds parts by successive addition of material, they provide the possibility to produce products with Functionally Graded properties, thereby introducing the concept often known as Functionally Graded Additive Manufacturing (FGAM). As this area of work is new, driven by academic research, and lacks available standardisation, there have been multiple different names proposed by different researchers in different publications as terms for this area, for example, functionally graded rapid prototyping (FGRP)[56], varied property rapid prototyping (VPRP)[57] and site-specific properties additive manufacturing[72]. However, even if there clearly is a great need for clarification of key terms associated with FGAM, this document does not include any attempts of alignment in terminology. This document is an overview of state of the art and the possibilities for FGAM enabled by present AM process technology and thus a purely informative document. Since this overview is based on available publications, and in order to facilitate cross referencing from these publications, this document has used the terms concerning FGAM as they are used in the original publications.

a) Traditional composite **b) FGM composite**

Figure 1 — Allocation of materials in a traditional composite and an FGM composite

STANDARDSISO.COM : Click to view the full PDF of ISO/ASTM TR 52912:2020

STANDARDSISO.COM : Click to view the full PDF of ISO/ASTM TR 52912:2020

Additive manufacturing — Design — Functionally graded additive manufacturing

1 Scope

The use of Additive Manufacturing (AM) enables the fabrication of geometrically complex components by accurately depositing materials in a controlled way. Technological progress in AM hardware, software, as well as the opening of new markets demand for higher flexibility and greater efficiency in today's products, encouraging research into novel materials with functionally graded and high-performance capabilities. This has been termed as Functionally Graded Additive Manufacturing (FGAM), a layer-by-layer fabrication technique that involves gradationally varying the ratio of the material organization within a component to meet an intended function. As research in this field has gained worldwide interest, the interpretations of the FGAM concept requires greater clarification. The objective of this document is to present a conceptual understanding of FGAM. The current-state of art and capabilities of FGAM technology will be reviewed alongside with its challenging technological obstacles and limitations. Here, data exchange formats and some of the recent application is evaluated, followed with recommendations on possible strategies in overcoming barriers and future directions for FGAM to take off.

2 Normative references

There are no normative references in this document.

3 Terms and definitions

No terms and definitions are listed in this document.

ISO and IEC maintain terminological databases for use in standardization at the following addresses:

— ISO Online browsing platform: available at https://www.iso.org/obp

— IEC Electropedia: available at http://www.electropedia.org/

4 Abreviations

AM Additive Manufacturing (see ISO/ASTM 52900)

AMF Additive Manufacturing Format, see 8.4.2.1 (see ISO/ASTM 52900)

CAD Computer Aided Design[48]

CAE Computer Aided Engineering[14]

DED Directed Energy Deposition, see Clause 6 (see ISO/ASTM 52900)

DMLS Direct Metal Laser Sintering, the name for laser-based metal powder bed fusion process by EOS Gmbh[40]

EBM Electron Beam Melting, the name for electron beam based metal powder bed fusion process by Arcam AB[40]

FAV Fabricatable Voxel, see 8.4.2.2[19]

STANDARDSISO.COM : Click to view the full PDF of ISO/ASTM TR 52912:2020

© ISO/ASTM International 2020 – All rights reserved

FEA	Finite Element Analysis[48]
FEF	Freeze-form Extrusion Fabrication, a material extrusion process based on the extrusion of feedstock in the form of pastes and application of freeze drying to form a green body which can be consolidated to the desired material properties by sintering. Presently only used for research and development projects.[34]
FEM	Finite Element Method[18]
FDM	Fused Deposition Modelling, name for material extrusion processes by Stratasys Ltd.[39]
FGAM	Functionally Graded Additive Manufacturing[61]
FGMs	Functionally Graded Materials[61]
FGRP	Functionally Graded Rapid Prototyping, name for FGAM used by Neri Oxman in some publications.[56]
LMD	Laser Metal Deposition, a common name for directed energy deposition processes that uses laser as the source of energy to melt and fuse metallic materials as they are being deposited, see Clause 6.[21]
LOM	Laminated Object Manufacturing, name of sheet lamination processes originally developed by Helisys Inc.[42]
MMAM	Multi-Material Additive Manufacturing, name used for AM when using more than one material in the same process.[61]
MM FGAM	Multi-Material Functionally Graded Additive Manufacturing, name for FGAM when the functional grading is based on building parts using more than one material in the same process, and the composition of the different material components is controlled by the computer program.[43]
PBF	Powder Bed Fusion (ISO/ASTM 52900)
SHS	Selective Heat Sintering, name of a powder bed fusion process that fuse polymer powder by means of a thermal printhead instead of the more common laser. The process was originally developed by Blueprinter but has been withdrawn from the market following the bankruptcy of this company.[40]
SLM	Selective Laser Melting, name for laser-based metal powder bed fusion process originally developed in collaboration between F&S Stereolithographietechnik GmbH (Fockele & Schwarze) and Fraunhofer Institute for Laser Technology. This name is a registered trademark of SLM Solutions Group AG and Realizer GmbH.[40]
SLS	Selective Laser Sintering, name for powder bed fusion process originally developed by DTM Corp, but which has been assumed by 3D Systems by the acquisition of this company. Since this was the first powder bed fusion process to be commercialized, it has sometimes been used synonymously for all powder bed fusion processes.[40]
STL	Stereolithography, name for a digital file format for three dimensional solid models originally developed for the Stereolithography process by 3D Systems, hence the name. Since this conversion to this format has been commonly available in several CAD programs this file format has until present times effectively been functioning as a de-facto standard for AM processes. (see ISO/ASTM 52900)
UAM	Ultrasonic Additive Manufacturing, name for a metal sheet lamination process by Fabrisonic LLC. The process fuses thin sheets (or ribbons) of metal by ultrasonic vibrations.[43]

STANDARDSISO.COM : Click to view the full PDF of ISO/ASTM TR 52912:2020

 © ISO/ASTM International 2020 – All rights reserved

VDM Vague Discrete Modelling[8]

VPRP Variable Property Rapid Prototyping, name for FGAM used by Neri Oxman in some publications.[57]

3MF 3D Manufacturing Format, a digital file format for three dimensional solid models in additive manufacturing, developed by the 3MF consortium, see 8.4.2.3.[3]

5 Concept of Functionally Graded Additive Manufacturing (FGAM)

5.1 General

Additive Manufacturing (AM) is the process of joining materials to make *parts* from 3D model data, usually *layer* upon layer, as opposed to subtractive manufacturing and formative manufacturing methodologies (ISO/ASTM 52900). AM enables the direct fabrication of fine detailed bespoke components by accurately placing material(s) at set positions within a design domain as a single unit[76]. The use of AM has given opportunity to produce parts using FGM, through a process known as Functionally Graded Additive Manufacturing (FGAM). AM technologies suitable for the fabrication of FGMs include Material Extrusion, Direct-Energy Deposition, Powder Bed Fusion, Sheet Lamination[43] and PolyJet technology.

Functionally Graded Additive Manufacturing (FGAM) is a layer-by-layer fabrication technique that intentionally modify process parameters and gradationally varies the spatial of material(s) organization within one component to meet intended function.

FGAM offers a streamlined path from idea to reality. The emergence of FGAM has the potential to achieve more efficiently engineered structures. The aim of using FGAM is to fabricate performance-based freeform components driven by their graduated material(s) behaviour. In contrast to conventional single-material and multi-material AM which focuses mainly on shape-centric prototyping, FGAM is a material-centric fabrication process that signifies a shift from contour modelling to performance modelling. Having the performance-driven functionality built-in directly into the material is a fundamental advantage and a significant improvement to AM technologies. An example includes highly customizable internal features with integrated functionalities that would be impossible to produce using conventional manufacturing[5]. The amount, volume, shape and location of the reinforcement in the material matrix can be precisely controlled to achieve the desired mechanical properties for a specific application[18].

Reference [57] describes the concept of FGAM as a Variable Property Rapid Prototyping (VPRP) method with the ability to strategically control the density and directionality of material substance in a complex 3D distribution to produce a high level of seamless integration of monolithic structure using the same machine. The material characteristics and properties are altered by changing the composition, phase or microstructure with a pre-determined location. The potential material composition achievable by FGAM can be characterised into 3 types:

a) variable densification within a homogeneous composition;

b) heterogeneous composition through simultaneously combining two or more materials through gradual transition;

c) using a combination of variable densification within a heterogeneous composition.

These three types of characteristics are described in 5.2 and 5.3.

5.2 Homogeneous compositions — Single Material FGAM

FGAM can produce efficiently engineered structures by strategically modulating the spatial position (e.g. density and porosity) and morphology of lattice structures across the volume of the bulk material[43]. We term this as varied densification FGAM (also known as porosity-graded FGAM). Reference [56] proposed this as a biological-inspired rapid fabrication that occurs in nature such as the radial density

STANDARDSISO.COM : Click to view the full PDF of ISO/ASTM TR 52912:2020

gradients in palm trees, spongy trabecular structure of bone and tissue variation in muscle which is heterogeneous in elasticity and stiffness. The directionality, magnitude and density concentration of material substance in a monolithic anisotropic composite structure contribute to functional deviations to modulate the physical properties, and to create functional shapes through structural hierarchy[54].

Man-made structures such as concrete pillars are typically volumetrically homogeneous[27]. Varied densification single-material FGAM was demonstrated through Steven Keating's work on functionally graded concrete being fabricated by a MakerBot machine with a modified material extruder. The concrete piece showed a functional gradient of density to mimic the cellular structures of a palm tree, from a solid exterior to a porous core. The porosity gradient was achieved by varying the powder particle sizes that were assigned in different locations during the gradation process or by varying the production process parameters[43]. For Reference [27], the density was controlled by aggregating the water ratio of the concrete at a given position, which led to excellent strength-to-weight ratio, making it lighter and yet more efficient and stronger than a solid piece of concrete.

5.3 Heterogeneous compositions — Multi-material FGAM

Multiple-material Additive Manufacturing (MMAM) is achievable using conventional 3D printers with multiple nozzles to deliver different materials to the platform[77]. In powder bed fusion, MMAM can be realized by utilizing a conventional delivery device in combination with a suction module to remove powder after the solidifying process-step[7]. As sharp interfaces exist in most conventional MMAM composites where two materials meet and interact, this creates a brittle phase[72]. Failure is commonly initiated between discrete change of materials properties, such as delamination or cracks caused by the surface tension between two materials[17]. Multi-material (MM) FGAM seeks to improve the interfacial bond by removing the distinct boundaries between dissimilar or incompatible materials. The mechanical stress concentrations and thermal stress caused by different expansion coefficients will be largely reduced[72]. Figures 2, a) and b) explain the approach of voxellization of Multi-material Additive Manufacturing according to Reference [7].

STANDARDSISO.COM : Click to view the full PDF of ISO/ASTM TR 52912:2020

 © ISO/ASTM International 2020 – All rights reserved

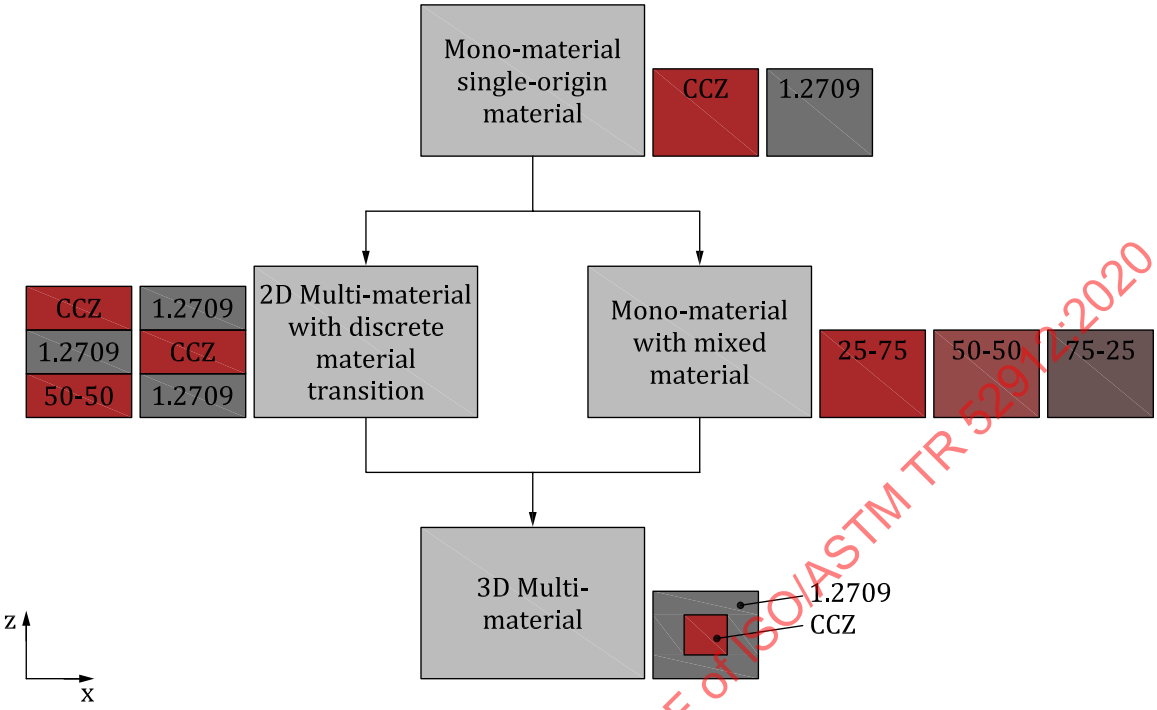

a) Conceptual diagram showing voxels arranged in 3D form (Fraunhofer IGCV and Reference [7])

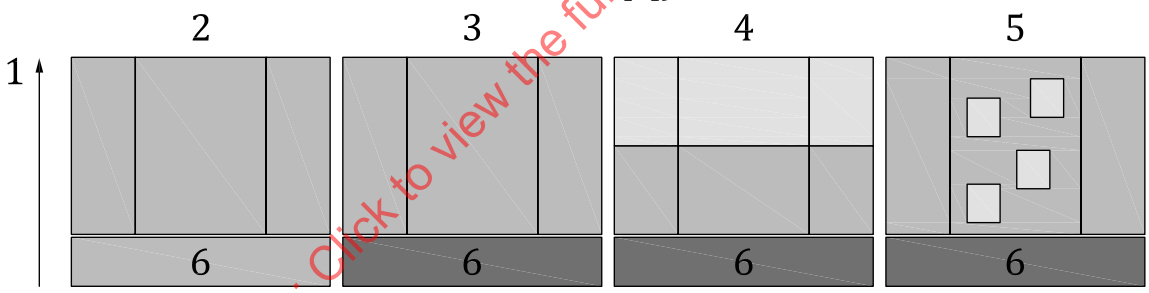

b) Illustration of MMAM (Fraunhofer IGCV and Reference [7])

Key

1 building direction
2 mono-material
3 2D hybrid
4 2D multi-material
5 3D multi-material
6 substrate

Figure 2 — Voxellization of multi-material additive manufacturing

STANDARDSISO.COM : Click to view the full PDF of ISO/ASTM TR 52912:2020

a) Multi-material AM **b) Functionally graded AM**

Key

1 discrete change of material properties
2 hard material for reinforcement
3 pillar to reinforce shape
4 smooth variation in material change

Figure 3 — Example of a part with multi-materials[73]

Reference [10] addressed the coupling effect of materials through sandwich configurations to achieve an optimum combination of component properties such as weight, surface hardness, wear resistance, impact resistance or toughness; or to produce material gradients to change the physical, chemical, biochemical or mechanical properties through complex morphology[22][28]. As the geometric arrangement of the two phases influences the overall material properties, the accuracy of the AM process is properly managed to ensure that the final component fulfils the expected functional requirements[72]. The difference between a Multi-material AM and a Functionally Graded AM part is illustrated in Figure 3 by Reference [73], Figure 4 further describes the continuous graded microstructure of FGAM using 2 materials.

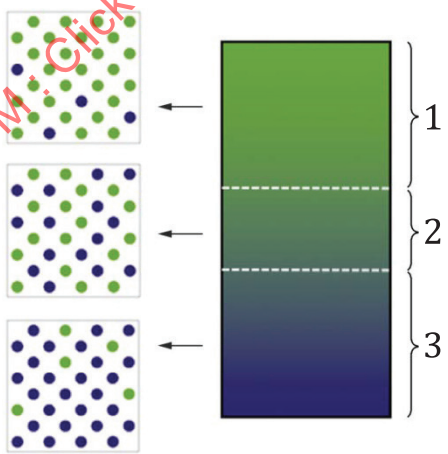

Key

1 phase 1 (particles with phase 2 as matrix)
2 transition phase
3 phase 2 (particles with phase 1 as matrix)

Figure 4 — Continuous graded microstructure of FGAM — 2 materials

The continuous variation within the 3D space can be produced by controlling the ratios in which two or more materials that are mixed prior to the deposition and curing of the substances[43]. According to

STANDARDSISO.COM : Click to view the full PDF of ISO/ASTM TR 52912:2020

 © ISO/ASTM International 2020 – All rights reserved

Reference [75], the compositional variation is controlled by the computer program to be considered as FGAM. Raw materials that are pre-mixed or composed prior to deposition or solidification are not considered to be FGAM. FGAM multi-layer composites can be divided into 4 types: transition between 2 materials [Figure 5 b)], 3 materials or above [Figure 5 c)], switched composition between different locations [Figure 5 d)] and heterogeneous compositions with density variation [Figure 5 e)]

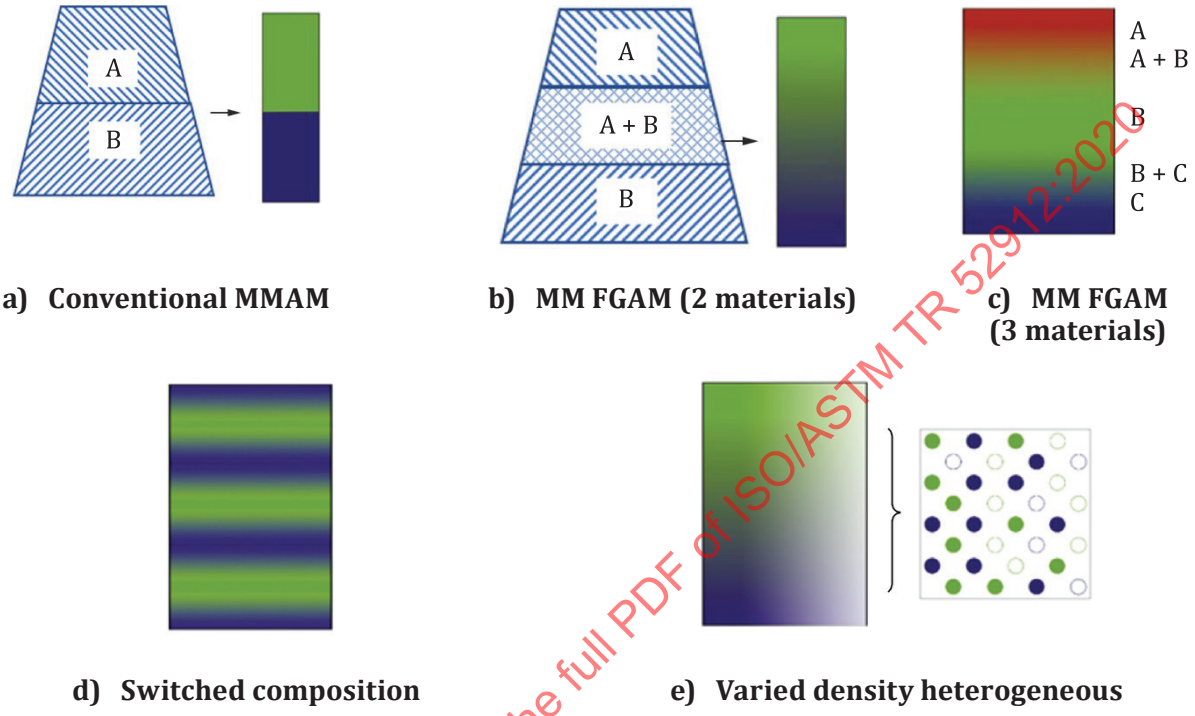

Figure 5 — Various classes of multi-material arrangement

The variation of material within a heterogeneous component can be classed as 1D, 2D and 3D gradient[48]. Key parameters include the dimension of the gradient vector, the geometric shape and the repartition of the equipotential surfaces. Figure 6 shows a diagram that classifies the different gradients of FGAM parts that can be assigned.

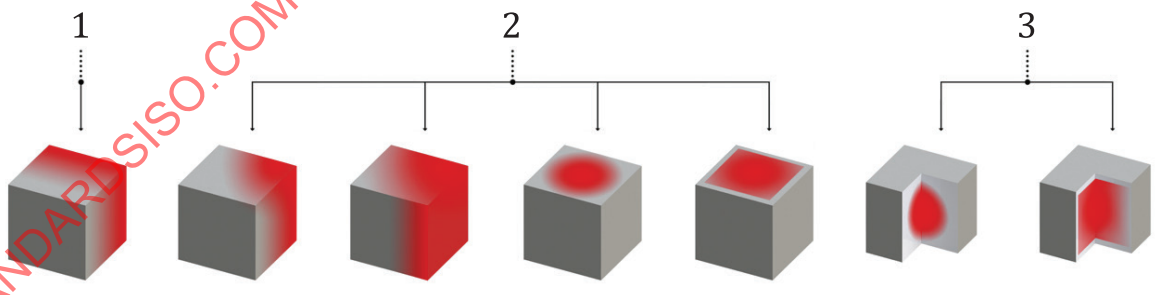

Key

1 one-dimensional gradient

2 two-dimensional gradient

3 three-dimensional gradient

Figure 6 — Representation of classifying FGAM gradients

STANDARDSISO.COM : Click to view the full PDF of ISO/ASTM TR 52912:2020

6 Advances of functionally graded additive manufacturing

6.1 General

AM has provided benefits including design freedom, reduced time to market in product development, service and increased R&D efficiency[5]. The emergence of FGAM expands the potential of prototyping of more efficient engineering structure that restore better function and structural performance with no tooling costs[61].

FGAM presents a new production paradigm in terms of industrial machinery, assembly processes, and supply chains[20]. It provides a vast range of opportunities for design, performance, cost and lifecycle management. For instance, light-weight designs can be achieved by adjusting the lattice structures to retain the structural strength and to achieve reduction in weight. The material matrix, reinforcement, volume, shape and location of reinforcement and the fabrication method can all be tailored to achieve a particular desired property for a specific application[18]. Ground-breaking innovation can be achieved through material substitution, especially in the medical implants industry, aerospace requirements and for creative industries[50].

FGAM optimises the exploitation of materials and expands the design toolbox available in AM processes in terms of multi-materiality[5][63]. FGAM advances material process-ability and contributes to more efficient material use[57]. By simplifying the assembly of complex parts using dynamic gradients, some of the known disadvantages of traditional composites can be avoided such as lowering the in-plane and transverse stresses at critical locations, improving residual stress distribution, enhancing breakage resistance and thermal properties, attaining higher fracture toughness, and reducing stress intensity[10][13]. FGAM can also provide desired properties at specific sections being site-specific or strategic locations around the parts[75]. Although part forming via AM requires a longer time than conventional manufacturing, having the capability to consolidate several machining processes into a single manufacturing sequence that could vastly reduce the overall manufacturing time-to-market. The amount of support material can also be potentially reduced as FGAM components can be designed to self-stabilize during the build process with minimum use of support structures. FGMs also offers variable property supports where sacrificial areas could be designed to break away. FGAM has the potential to meet future requirements in environmental sustainability such as reducing material using and energy consumption.

6.2 AM and FGAM process

The key manufacturing process of Additive Manufacturing consists of 5 main stages, from 1) the receiving of the CAD file into an AM system, 2) the conversion of CAD file into .STL (or AMF) File, 3) 3D CAD data is sliced into 2D layers, 4) layer-by-layer fabrication of the AM part 5) post processing or end part finishing (e.g. support-structure removal, cleaning and polishing) (see Figure 7).

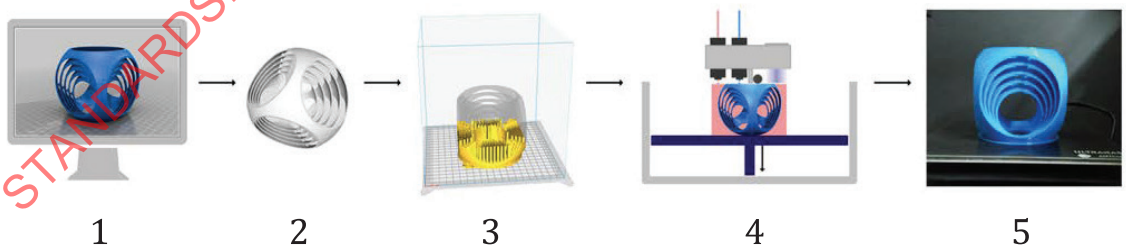

Key

1 CAD-based 3D model
2 .STL file
3 sliced layers
4 AM fabrication
5 end part finishing

Figure 7 — Additive manufacturing (AM) process flow

STANDARDSISO.COM : Click to view the full PDF of ISO/ASTM TR 52912:2020

 © ISO/ASTM International 2020 – All rights reserved

The methodology of FGAM introduces the importance of toolpaths. Path planning is the key influence on the material distribution of the manufactured parts. The feature of toolpath planning by Reference [48] and [47] is described as four steps in Table 1.

Table 1 — Feature of toolpath

Step 1: Description of the Part Geometry and Material Distribution	Defining the mechanical function of the part by describing the geometry, the material distribution, the gradient dimension or vector, the shape of equi-composition or equi-property surfaces.
Step 2: Determination of manufacturing strategies	Material data that concerns the chemical composition and characteristics of the material(s) used is gathered. The material distribution and orientation of slices are defined. The toolpaths are evaluated and calculated. The mathematical data is used to find the most appropriate manufacturing strategy and printer.
Step 3: Numerical Control (NC) programming	Numerical Control (NC) programming, involving paths and process parameters is generated such as; but not limited to G programming language (ISO 6983) from the toolpath route. A 3D grid with machine data and the material distribution is generated to the defined paths.
Step 4: Manufacturing	The NC program is used by; but not limited to CNC controller. The operation involves fabricating slices in order to build 3-D cross-section profiles to construct the component layer by layer with pre-determined specific material deposition. The file is sent to the AM machine for the production sequence to commence.

The main AM processes for FGMs including material extrusion, powder bed fusion, directed-energy deposition and sheet lamination are discussed in the next section. Other technologies mainly used for producing metal–metal or metal–ceramic FGM include Selective Laser Melting, laser cladding-based techniques and Ultrasonic Consolidation (UC). For fabricating polymer–polymer or polymer–ceramic, ceramic–ceramic FGM, selective laser sintering and inkjet printing have been mainly used[15][16][17]).

6.3 Material extrusion

Material extrusion is an AM process category in which material is selectively dispensed through a nozzle or orifice (ISO/ASTM 52900) (see Figure 8). In this type of process, polymers such as ABS, PLA, Nylon, etc. is drawn through a nozzle, where it is heated and deposited layer by layer onto the cross-sectional area of object slice. The key process parameters in Material Extrusion are the filament width, the raster-fill angle and the raster-fill pattern[43]. When using the process for components where a high tolerance is achieved, gravity and surface tension is accounted for Reference [21].

STANDARDSISO.COM : Click to view the full PDF of ISO/ASTM TR 52912:2020

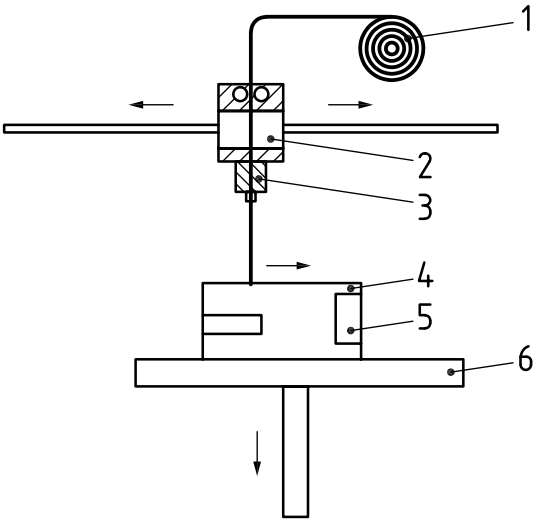

Key

1 material spool
2 heated element
3 nozzle
4 object
5 support material
6 build platform

Figure 8 — Material extrusion[39]

Freeze-form Extrusion Fabrication (FEF) is another material extrusion process of building FGAM parts layer-by-layer through computer-based controlled extrusion and deposition. It uses a triple-extruder mechanism, each carrying a paste of the material[45]. The different material pastes are subsequently sent to a static mixer to be mixed into a homogeneous paste (known as green part) as shown in Figure 9. In Reference [34] investigation, the green part made up of alumina (Al_2O_3) and zirconia (ZrO_2) is freeze-dried at a below-freezing temperature of –25 °C and with a pressure of 3 000 Pa for 24 h. Consequently, sintered at a high temperature of 1 °C/min up to 600 °C at the first heating to burn out the organic binder. The second heating is 10 °C/min up to 1 550 °C for another 90 min, then brought to cool back to room temperature at 25 °C/min. The heating temperature usually does not exceed the melting temperature of the constituent materials[34]. Energy-dispersive spectroscopy (EDS) is used to analyse the material composition of the sintered FGM components. The results produced by Reference [34] using the FEF system presented a positive compositional change across the graded samples.

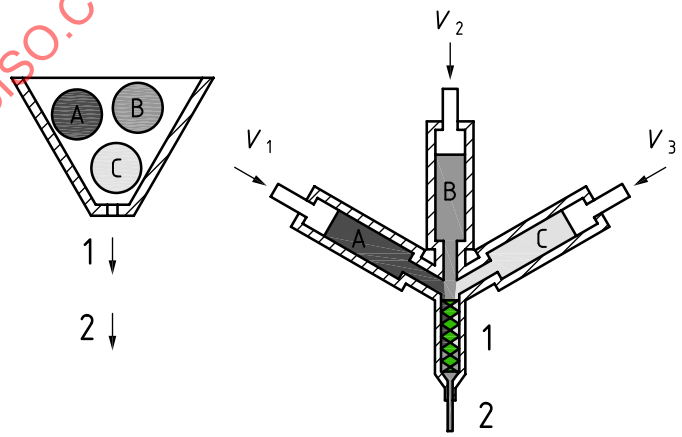

Key

1 static mixer
2 FGM Green part

Figure 9 — Schematic diagram of static mixer and triple extruder

STANDARDSISO.COM : Click to view the full PDF of ISO/ASTM TR 52912:2020

 © ISO/ASTM International 2020 – All rights reserved

Continuous control over the material compositions and their gradients during the part building process can be achieved by planning (with time delay taken into consideration) and controlling the relative flow rates of the different pastes. For example, assuming that the three cylinders containing the three different pastes have the same cross-sectional area, a desired paste mixture consisting of 20 % paste A, 30 % paste B, and 50 % paste C can be achieved by controlling the three plunger velocities with the ratios of v_1:v_2:v_3 = 2:3:5, where v_1, v_2, and v_3 are the plunger velocities for pastes A, B, and C, respectively.

Material extrusion is a widespread and low-cost type of process with the advantages of readily available materials such as ABS, which has good structural properties identical to a final production component. Conversely, the accuracy and speed are low when compared to other AM processes. The nozzle radius and thickness limits and reduces the final quality[32]. Many factors (e.g. constant pressure of material) are taken into account in order to increase quality of finish. As with most heat related post processing processes, shrinkage is likely to occur and is taken into account if a high tolerance is required.

At present, the control of material mixing and extrusion need to be split into two separate systems, then coordinated with the toolpath movement to produce specified gradients. Reference [54] noted that the spindle output channels communicate directly with the extrusion system controllers.

Material extrusion has the potential to fabricate parts with locally controlled properties by changing deposition density and deposition orientation. Two conceptual examples with locally controlled properties are shown in Figure 10 a) and b). Sharing the identical geometries, different deposition strategies are allocated to sections of the four parts to achieve locally controlled properties. The part's stiffness property can be locally controlled by depositing filament in various orientations and densities. As a result, stiffness variations along the horizontal axis can be tailored[35].

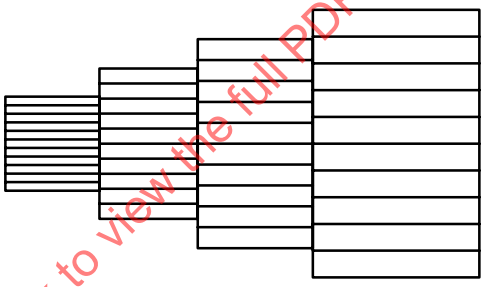

a) Unidirectional deposition (θ = 0) **with different deposition densities**

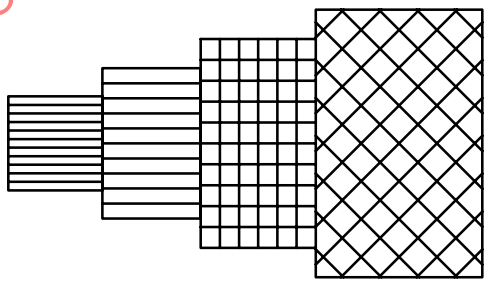

b) [0/0], [0/90/0] s, **and** [±45] s **deposition orientations respectively, with different deposition densities for each portion**

Figure 10 — An example showing the direction of deposition and densities represented from the top view

Reference [68] developed a framework to fabricate ABS FGMs using material extrusion by using variable properties in different regions such as tailoring the material properties. This work can be extended for modelling and simulating the components for different loading conditions. Reference [68] stressed that the fundamental step is to identify the process control parameters that were likely to affect the properties of those parts. Based upon the previously built models for model volume which is one of the main parameters that affect the material density and hence elastic modulus, the selected build parameter considerations are: the raster width, contour width, air gap and raster angle.

STANDARDSISO.COM : Click to view the full PDF of ISO/ASTM TR 52912:2020

6.4 Powder bed fusion

Powder bed fusion methods comprise of Direct Metal Laser Sintering (DMLS), Electron Beam Melting (EBM), Selective Heat Sintering (SHS), Selective Laser Melting (SLM) and Selective Laser Sintering (SLS) where both involve the spreading and sintering of 0,1 mm thick of powder material layer-by-layer with a roller in between fusion of layers, selectively melt and fused together using either a laser or electron beam[40] (see Figure 11). PBF is a relatively inexpensive process with a larger range of material options. The common powder based materials used for SHS is Nylon; Stainless Steel, Titanium, Aluminium, Cobalt Chrome, Steel for DMLS, SLS, SLM, with addition of copper for EBM[40]. Apart from higher resolution with hierarchical and functional complexity, PBF advances from feedstock fluidity and reusability and no need of additional support structure. Conversely, most laser based PBF systems suffer from slow speed with high power usage[23]. The finish is dependent on powder grain size and post processing is often required.

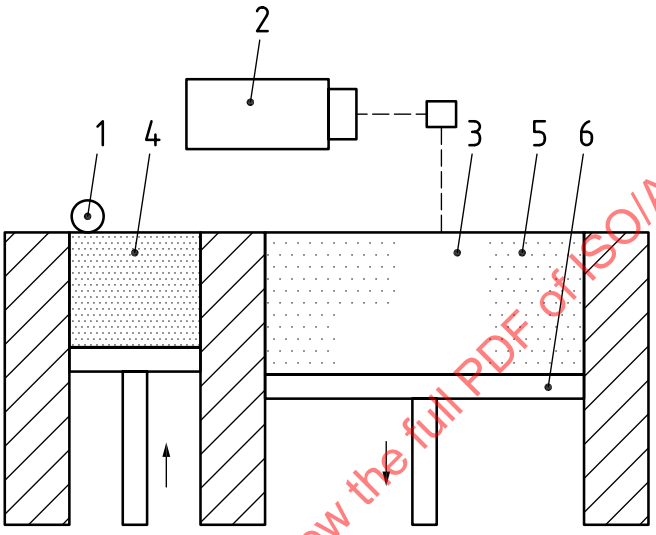

Key

1	powder roller	4	object / part
2	laser	5	object / part
3	new powder stock	6	build platform

Figure 11 — Powder bed fusion[40]

Reference [16] used the SLS process to fabricate three-dimensional structures in functionally graded polymer nanocomposites of Nylon-11 composites with various volume fractions of 15 nm fumed silica nanoparticles (0 % to 30 %). The SLS processing parameters for the different compositions were developed by Design of Experiments (DOE). The densities and micro/nanostructures of the nanocomposites were examined by optical microscopy and transmission electron microscopy (TEM). The tensile and compressive properties for each composition were then tested. These properties exhibit a nonlinear variation as a function of filler volume fraction. The results were used to construct two component designs presenting a one-dimensional polymer nanocomposite material gradient.

The results indicate that SLS can produce complex components with spatially varying mechanical properties using the correct powder-delivery[16]. With the precision of SLS techniques in which it is possible to join very thin sections (from 0,02 mm to 0,06 mm) together, it permits very complex geometries to be created as shown by the research results from References [69] and [74] who proposed that SLS can produce FGM implants and scaffolds that are closely matched with human bone. Reference [74] carried out an experiment on the properties of titanium Ti-6Al-4V alloy implants with gradient porosity using the SLS process. The properties evaluated in the experiment include surface roughness, microstructure, chemical composition and mechanical properties.

Selective Laser Melting (SLM) is another potential technique to realise FGAM using metal, where metallic powders are injected into a high-power laser beam. If two feeders of powder are used, it is possible

STANDARDSISO.COM : Click to view the full PDF of ISO/ASTM TR 52912:2020

 © ISO/ASTM International 2020 – All rights reserved

to continuously modify the composition of the deposited metal[31]. A particular strength of SLM is its ability to manufacture components incorporating periodic lattices, as demonstrated by Reference [44] who studied the relationships between the lattice geometry and the mechanical behaviour of uniform density Al-Si10-Mg lattices, together with the crushing behaviour of the FGM under quasi-static loading. As-built lattices may undergo brittle collapse and may show deformation behaviour, the application of a microstructure-altering thermal treatment can drastically improve the behaviour and its capability for energy absorption. Heat-treated graded lattices have shown to exhibit progressive layer collapse and incremental strengthening. The graded and uniform structures absorbed almost the same amount of energy prior to densification, but densification occurred at around 7 % lower strain for the graded structures.

Fraunhofer IGCV in Augsburg produced a prototype that showed a successive allocation and solidification of two materials. Reference [7] demonstrated the possibility to create parts having two different materials within one layer in Figure 12. This was carried out by solidifying the material spot wise without mixing the materials before the process in-situ.

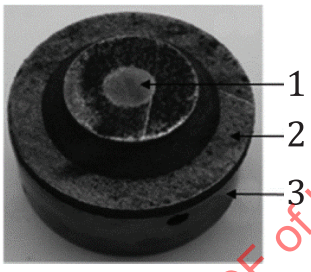

Key

1 1.2709

2 CuCr1Zr

3 conventionally manufactured part made of 1.2767

NOTE 1.2709 is embedded cone-shaped into the CuCr1-ZrO_2 cone) courtesy: Fraunhofer IGCV and Reference [7].

Figure 12 — Multi-material part produced by Laser based powder bed fusion consisting of Copper-Chrome-Zirconia and Tool Steel 1.2709

EBM processes can also be used for the manufacture of FGM parts with good mechanical properties rapidly and energy efficient[15]. EBM-built parts have low residual stress due to elevated build temperatures[21]. This theory is exemplified in Reference [71] experimental and simulation study on build thickness-dependent microstructure for electron-beam melted Ti-6Al-4V titanium alloys.

6.5 Directed energy deposition

Laser Metal Deposition process (LMD) is an important direct-metal deposition technology that belongs to the Directed-Energy Deposition (DED) class of AM. DED is a more complex fabrication process commonly used in product remanufacturing. It has the ability to modify, repair, reinforce components or add additional material (e.g. coating) to an existing material base structure from a 3D CAD model in a single process that is not achievable with other AM technologies[21]. The laser-based Additive Manufacturing process of directed energy deposition (DED) can be used to fabricate metallic parts with a gradient by adjusting the metallic powders[12] or wires[52] being delivered to the melt pool Multi-wire Arc deposition using multi wire Gas Metal Arc Welding (GMAW) to control composition of aluminium alloy deposits[62] has been demonstrated. LMD can also be used to manufacture entire components; however, Reference [6] explains that LMD is still limited in terms of geometrical complexity. Novel ways need to be developed to improve the system in order to tackle more geometrically complex parts.

A typical DED machine consists of a nozzle mounted on a multi-axis arm that deposits melted material (wire or powder) onto the specified surface from an angle. Energy from laser, electron beam or plasma arc is used to create beads, tracks and layers of solid material upon solidification of the melt pool on

STANDARDSISO.COM : Click to view the full PDF of ISO/ASTM TR 52912:2020

the substrate; while the powder or wire material delivery is coordinated with the energy source and delivered into the melt pool (Figure 13).

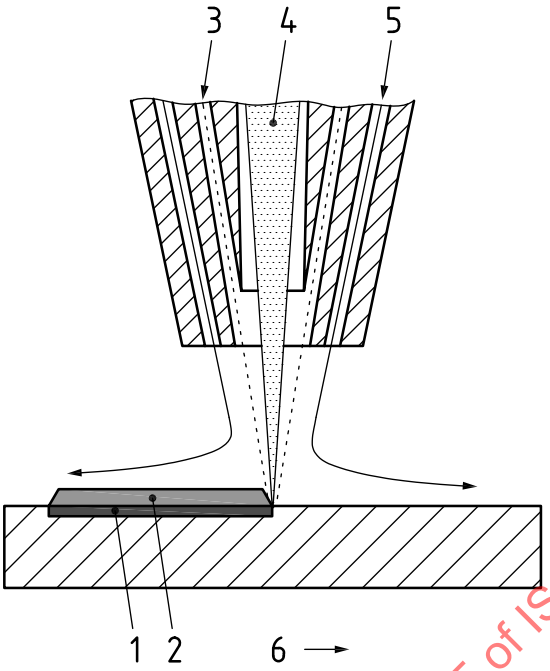

Key

1 mixing zone
2 applied material
3 powder stream
4 laser beam
5 protective gas
6 deposition direction

Figure 13 — DED process (Laser Community, 2016)

Regarding available material options, LMD is able to incorporate materials that can be melted by a laser such as steel, titanium-based alloys, cobalt-based alloys, nickel, aluminium and even copper. The restriction is that this process requires powder that can fuse together within the surface of the melt pool. Therefore, when choosing materials, in-depth chemical and physical knowledge is important[6]. Although the LMD process is a fairly new manufacturing technique[12] successfully conducted a thermodynamic study of the production of FGM pieces built from 304L stainless steel incrementally graded to Inconel 625 using the DED process with an RPM 557 Laser Deposition System under an argon atmosphere. The system allows up to four powders to be added to the build during fabrication and the volumetric fraction of each powder can be changed by about 1 % per deposited layer. Twenty layers of SS304L were deposited before the grading of layers. In the graded region, the volume of SS304L powder was reduced by 4 % and IN625 powder was increased to the same amount in each successive layer for a total of 24 layers. Nineteen layers of IN625 were deposited on top of the gradient zone. The layers were approximately 0.5 mm tall and were built by a 910W YAG laser with a hatch angle of 60°[12].

6.6 Sheet lamination

Sheet lamination of FGAM parts can be achieved through Ultrasonic Additive Manufacturing (UAM) and Laminated Object Manufacturing (LOM) (see Figure 14). UAM process uses sheets or ribbons of metallic materials such as aluminium, copper, stainless steel and titanium that are bound together using ultrasonic welding, whereas LOM uses a similar sequential layer by layer approach but uses paper and adhesive instead of welding. Laser is then used to produce cross-hatches on the unwanted areas based on the path generated from the CAD digital data for ease of waste material removal after the process is complete[43]. UAM processes may require additional CNC machining and removal of the unbound metal, often during the welding process. UAM is a low temperature process that permits fabrication of metal and functionally graded parts with internal geometries.

STANDARDSISO.COM : Click to view the full PDF of ISO/ASTM TR 52912:2020

 © ISO/ASTM International 2020 – All rights reserved

As a solid-state process, UAM and LOM does not require melting of materials. UAM can bind materials together precisely to a graded layer metal–metal FGM that has a potential to furnish a metallic product with pre-defined graded properties with relatively little energy using a combination of ultrasonic frequency and pressure[33]. The main benefits of LOM include fast speed, low cost, ease of material handling, but the strength and integrity of models is reliant on the adhesive used[42]. Cutting can be very fast due to the cutting route only being that of the shape outline, not the entire cross-sectional area. With respect to the shortcoming, the finishes can vary depending on the material used. Although LOM is relatively limited to paper and predominantly use for prototyping, gradual developments in materials used for the process such as metal, ceramics and composite materials have made it possible to manufacture functional components.

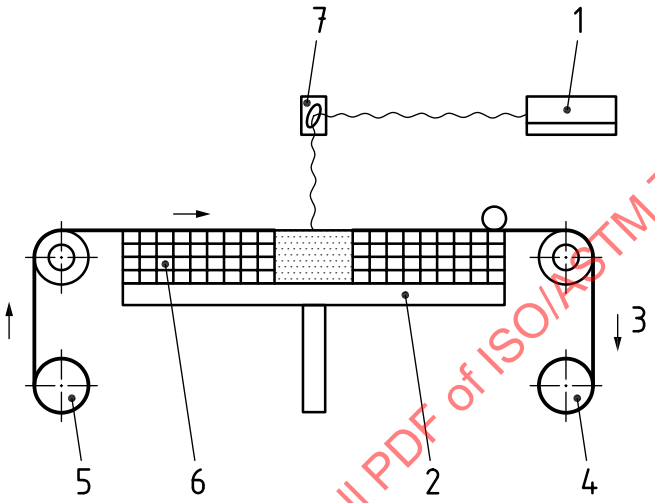

Key

1 laser
2 build platform
3 travel direction
4 used material spool
5 material spool
6 cross hatched material
7 motorized mirror

Figure 14 — Schematic diagram of ultrasonic consolidation[42]

Graded metallic FGMs produced by ultrasonic consolidation was developed by Reference [33] by joining three different metallic foils together. The different compositions that made up the FGM part were copper foils (CU), stainless steel (SS) and Aluminium (Al 1100 and 3003) as shown in Figure 15. The work was aimed to fabricate a sample that possessed graded strength (or thermal conductivity) in the direction of the deposition of foils. In his work, the optimum-process parameters for welding used to combine the metals was established (e.g. weld force, speed, amplitude, substrate temperature) and the characterization, microstructure and micro-hardness of the graded structure were studied. Although, Reference [33] clarified that the process parameters that can be effectively varied, the UAM process is rather limited as the FGM outcome is limited to the machining strategy or controlling the adhesion.

STANDARDSISO.COM : Click to view the full PDF of ISO/ASTM TR 52912:2020

© ISO/ASTM International 2020 – All rights reserved

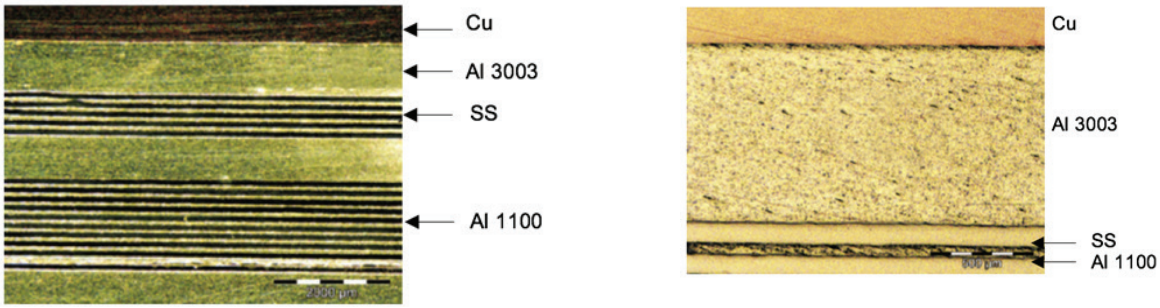

a) FGM produced through ultrasonic consolidation process by Reference [33]

b) Metallography Cu+Al 3003+SS+Al 1100+SS

Figure 15 — Microstructural analysis of a specimen built from ultrasonic consolidation

7 Current limitations of FGAM

7.1 General

As the field of FGAM is still developing, existing knowledge about the material, fabrication processes, and simulation in a CAD/CAE software is still lacking and inadequate to efficiently support non-discrete material definitions[61]. The fundamental issue concerning design-supporting systems, manufacturing processes mechanisms, materials, and the resultant part properties require further investigation[35]. These limitations are interlinked and cannot be solved independently. Therefore, a global approach is required in order to account for the entire FGAM production process[22][72].

7.2 Material limitations

7.2.1 General

Material processability is a fundamental element for the performance of FGAM parts[5]. The current approach of AM is that the design of shapes and form are determined separately from the assignment of discrete material properties[59]. In terms of FGAM, the performance data, characterisation of materials and processing parameters is still lacking. Producing FGM components requires extensive knowledge about the material and the manufacturing constraints. The challenge lies in the selection of materials, discovering the optimum material distribution, ensuring that the material properties of FGAM components, defining tolerances and predicting the outcomes[72].

The gradient transition determines the performance of the FGM part[72]. When using materials with variable and non-uniform properties, the situation becomes much more complex compared to a uniform material. It is more complex to determine the overall part geometry, designing the optimal spatial distribution between heterogeneous materials, and to predict how rapidly the step-change in properties are to be varied. Not all neighbouring compositions are compatible or can be smoothly altered to be transitioned between with ease, especially for alloys in-situ. The possible organisation of the phases is difficult to measure. Conventional design rules and methods (e.g. the required mix of properties, required arrangement of phases, and compatibility of materials) need to be re-established to avoid undesirable phases. Knowledge of processing-structure-property relationship for existing materials is therefore required to accurately predict the part performance.

Shared databases or “online” portal could also be established to provide a catalogue of material performance information for comparison and sharing; for specific applications, materials or AM processes and to develop a predictive model for proper process control.

STANDARDSISO.COM : Click to view the full PDF of ISO/ASTM TR 52912:2020

 © ISO/ASTM International 2020 – All rights reserved

7.2.2 Defining the optimum material property distribution

The gradient distribution is a fundamental element for manufacturing and the resultant material properties. Available studies do not provide guidelines for material arrangement, and most work have little consideration to the effects of a steeper or shallower gradient. It indicates the need to determine the optimal spatial distribution of material properties to meet the intended performance of the FGM part. Defining the arrangement and transition phase of the materials is complex and requires extensive knowledge of the material, manufacturing constraints and service demands. It is crucial to highlight the fixed regions that cannot be altered without compromising the part integrity, how quickly and controlled can the material properties be varied, as well as it the mechanical or thermal loading [72]. Increased complications arise when deciding global component geometry due to variable material properties, or when multiple transitions of different properties is introduced.

7.2.3 Predicting the material properties of manufactured components

When generating gradients of high and low strength material, the material strength may vary linearly between the two values. The changing material properties and its microstructure will need to be measured and quantified. In addition, it is difficult to measure the material properties at all locations between sites, and neither would such an approach be useful to model the response of the structure. In Reference [72] it was suggested two adoptable methods to represent the property variation based on measured values using

a) the exponential law idealisation, and

b) through material elements or “Maxels”.

Assuming that the material contains no weak interface, such an arrangement of elements could then be analysed using FEM. Any extra phases generated by the interface between different sites is identified as they could result in a step change in properties. Some CAE software for Finite Elements Method provide tools for assessing the material properties as function of field variables (e.g. ABAQUS). The predictions based on individual phase properties may be inadequate if there is any weak bond between phases.

7.2.4 Material selection

Current material selection support for FGAM systems is relatively limited[20]. If multiple compositions are to be used, the complexity increases and the mixing range is affected. It is important to consider the behaviour and the compatibility of all neighbouring materials, the transition efficiency, and also choosing the right materials to meet desired properties in the same state, and with compatible use of AM technology and processability.

7.2.5 Understanding differences and defining tolerances

The material properties of FGAM are less predictable than a uniform composition. It is necessary to understand that the distribution of chemical components and material properties of the manufactured parts may deviate from the final component. This could be due to the physical characteristics, such as macro segregation of solids or due to poor process control when mixing the different materials. In-situ monitoring of the phases and chemistry during the build process may offer a solution or provide more information about the result. Property tolerances may need to be redefined, comprising the overall variation in components and local variation. In addition to ensuring the correct properties at specific locations, there may be requirements arising from the transition from one property to another, for example to avoid any sharp changes in properties.

7.3 Limitations of current additive manufacturing technologies

The basic strategy of current conventional AM technologies is to assign material properties to a CAD geometry, focusing around the geometrical description of form as a property-less feature. Most AM parts are primarily used for visual representations, assembly and fit verification, rapid tooling and pattern reproduction [56]. Commercial AM technologies operate predominantly on isotropic materials, serving principally as prototyping technologies. Existing systems such as Material Extrusion and Powder Bed

STANDARDSISO.COM : Click to view the full PDF of ISO/ASTM TR 52912:2020

Fusion processes have demonstrated the feasibility of multi-material components. Commercial Material Extrusion systems often include dual or triple extruder heads but the materials cannot be mixed. Only systems with a multi screw extruder and several hoppers are able to provide a mix of materials and modifying the flow rate of each extruder.

The ability to fabricate FGMs with precise positioning and at a high resolution is still a major challenge, especially at microscale and Nano scale. For FGAM parts, an efficient material delivery system supplies material efficiently and accurately, and switches materials effectively between and within layers[75]. There remains a need to look into the procedures and protocols that can guarantee a reliable and predictable outcome when dealing with distribution of materials with constituent phases and transitioned properties throughout the structure, alongside with considerations on the material usage, platform structure, deposition rate and fabrication speed[36]. Current FGAM components can be realized using Polyjet technologies such as the Objet Connex range of machines. The machine is capable of representing complex internal structures of 3D objects by jetting multiple materials to create composite substances that have pre-set combinations of mechanical and physical properties. Another option is a promising technology known as a cold spray technique[53], where high velocities of particles by supersonic gas flow impact on a substrate producing intensive plastic deformation of particles by using two powder feeders in which it becomes a FGAM process.

Although current AM systems have demonstrated variable property gradient printing, the mixing strategies are difficult to control and use a relatively large volume. Methods of using two-dimensional line nozzles for Material Extrusion have yet to be explored. According to Reference [54], 2D gradients generated prior to extrusion cannot be deposited using conventional round nozzles. The use of multiple extrusion nozzles in FGAM increases the challenge for efficient mixing and fluid handling. Present FGAM is only capable of fabricating small, non-functional test-parts with simple morphology and discrete multi-material distribution[47]. To move to functional parts with greater precise gradients, new changeable material delivery systems are developed to deliver material(s) with achievable numerically controlled variable-density or across a printed volume. Reference [48] emphasized the importance of having a complete management and control of the entire process and parameters such as the laser power, powder and gas flow rates, axis motion and with an optimal manufacturing strategy.

7.4 CAD Software limitations

7.4.1 General

Software support is fundamental to map the distribution of various material properties across the 3D CAD geometry. AM technologies have evolved beyond the capabilities of today's 3D file formats[3]. Computer systems today support a multitude of file formats for 3D models to communicate with AM machines[2]. For FGAM to take off, it will require a new approach of Computer-Aided Engineering (CAE) analysis to specify, model and manage material information for Local Composition Control (LCC)[14]. The LCC data can be sent to the machine in a layer-by-layer pixel sheet so that when they are stacked, they are expressed as a voxel. Advanced data driven additive fabrication technologies permit the ability to strategically control the density and directionality of the material substance to generate the final form. The software would need to be capable of layering or compounding dissimilar materials, controlling stiffness variations through logical distribution of hard and soft materials throughout the geometry, and include colour, textures and other characteristics.

CAD limitations arise from the limited capabilities of file formats to describe the micro-scale physical properties of materials and restricted path planning steps to define material properties in a continuous or non-discrete manner within the internal composition or for the solid[72]. Current CAD tools employed by AM technologies remain fairly traditional. The common input data format from a CAD system is usually a triangular facet model/ represented by Polygonal meshes, such as the STereoLithography (STL file) and the OBJ file format[20]. STL files introduce errors such as gaps and they do not scale well to high resolutions [78]. STL does not contain material and property information. It has no extensibility mechanism to add further features[3]. In addition, most commercial CAD systems are in the category of 'B-rep' modellers, meaning that the inside of the 'solids' are empty and are just a surface representation of the geometry[19].

STANDARDSISO.COM : Click to view the full PDF of ISO/ASTM TR 52912:2020

 © ISO/ASTM International 2020 – All rights reserved

Although some approaches such as Voxels (voxel-based graphics methodologies), finite-elements (FEM/FEA), particle system elements and vague discrete modelling elements (VDM) exist to generate lattices for material based model[8], editing is difficult due to the lack of a robust method to relate and integrate the data with modelling and analysis. The major drawback is the huge consumption of computational power needed for calculations and the long processing time to generate individual voxels for every layer. In such case, it is assumed that the properties of the 3D CAD model are predictable[72]; otherwise, each voxel is modified individually if the design requires re-modification[30]. Reference [63] emphasized that novel computational approaches are required, using scalable encodings and advanced bio-inspired form finding processes to produce performance driven and geometrically diverse 3D models that are compatible with AM technologies.

7.4.2 Data exchange formats

There are several data exchange formats – AMF (Additive Manufacturing Format), FAV (Fabricatable Voxel) and 3MF (3D Manufacturing Format) that are suitable for FGAM adoption to digitally represent the material gradient and properties beyond the fixed geometric description[63].

7.4.2.1 AMF — ISO and ASTM have accepted a standard format called Additive Manufacturing Format (AMF) published in the ISO/ASTM 52915 standard. It is a XML- file format that is capable of storing color, materials, lattices, duplicates and constellations of the volumes that make up the object, to be processed through AM. The AMF file format aims to increase geometric accuracy by supporting the curving of triangular patches, which can reduce the number of mesh elements required to describe a surface, with potential to reduce the error[78]. The AMF File Format can be generated through mainstream CAD packages such as Solidworks, Inventor, Rhino and MeshMixer but it has not yet seen wide-spread adoption. A relevant function for FGAM is the element <composite> that is used to specify the proportions of the composition as a constant or a formula dependent on the x, y and z coordinates. AMF provides capabilities that support FGAM including Material specification;

— Mixed and graded materials and substructures;

— New materials can be defined as compositions of other materials;

— Porous materials.

7.4.2.2 FAV — The first 3D data format capable of retaining information on the surface of a 3D model and also information on internal structures, colours, materials, and connection strength[73]. FAV (Fabricatable voxel) is a new voxel-based data format researched and created by Fuji Xerox in collaboration with Keio Research institute at Shonan-Fujisawa Campus (SFC). 3D model data in FAV format is optimized for fabrication, comprises of information required for fabrication (e.g., shape, material, colour, connection strength) in a three-dimensional space, for both the exterior and interior of an object[73]. Each voxel can be expressed with various attribute values, including colour information (RGB, CMYK, etc.) and material information (ABS, nylon, etc.). Users can freely model and effectively manage the complex internal structures and attributes by controlling the relationships between different voxels and then save this data (Figure 16). In addition, the file format allows the user to design (CAD), analyse (CAE), and inspect (CAT) 3D model data seamlessly in an integrated manner without having to convert data. FAV model data may be created, edited, and utilized within systems (interoperability) and encourages the design of 3D objects with a greater degree of freedom, for example creating functionally graded designs with multiple materials minutely distributed among one another or designs with finely intertwined internal structures. The FAV data format allows voxel data to be used as-is for physical simulations, such as simulations of object deformation due to external forces. Users are then able to easily modify the design of a three-dimensional object based on the results of these simulations (e.g. material changes and structural changes- reinforcing shape, removing internal areas, etc.). For example, after performing a physical simulation on voxel data, users can redesign areas that had high amounts of distortion, making changes in the materials used or adding structural modifications. It is also possible to use the attributes that are

STANDARDSISO.COM : Click to view the full PDF of ISO/ASTM TR 52912:2020

defined for each voxel, including the connection strength between neighbouring voxels, for applications such as making design changes to achieve a desired strength or optimizing a design for 3D printing.

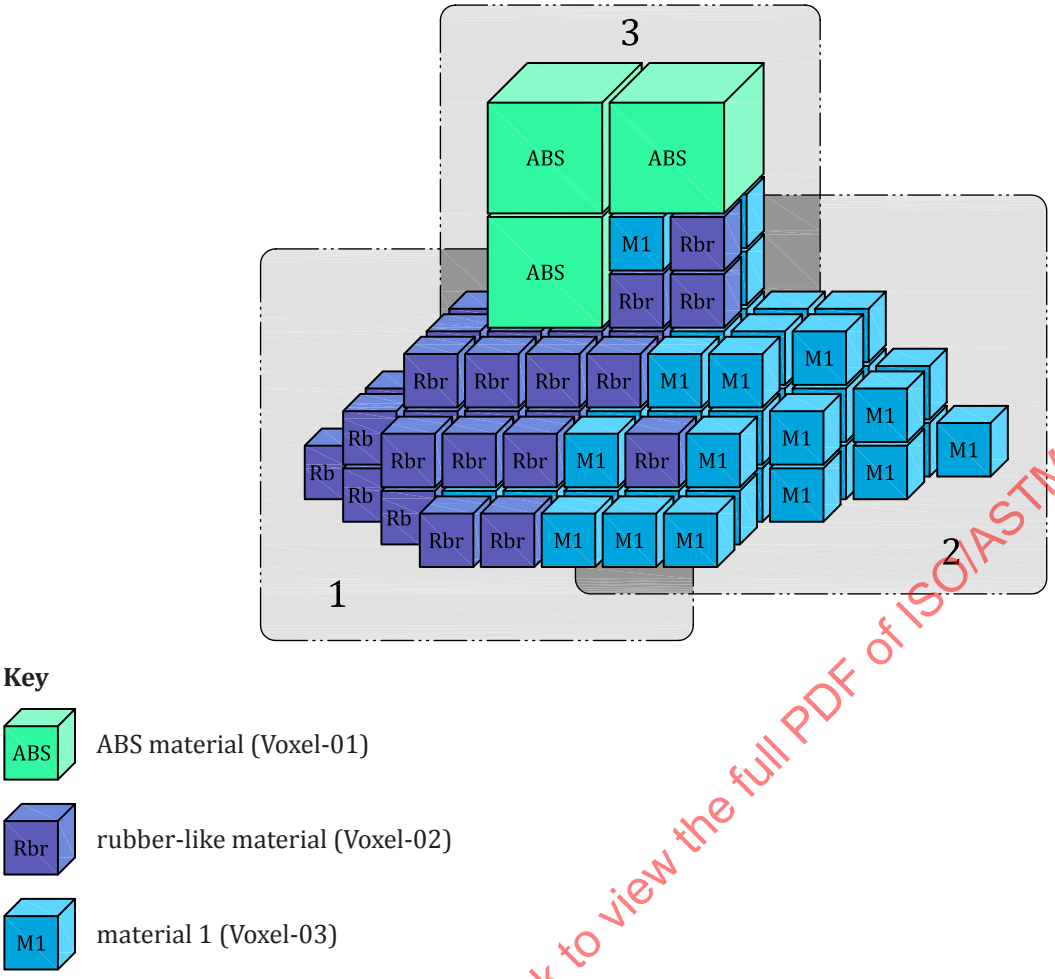

Figure 16 — Conceptual diagram showing voxels arranged in 3D form[73]

STANDARDSISO.COM : Click to view the full PDF of ISO/ASTM TR 52912:2020

7.4.2.3 3MF — 3D Manufacturing Format (3MF) is a XML-based open format developed by the 3D consortium that allows Additive Manufacturing design applications to send "full-fidelity" 3D models to a mix of other applications, platforms, services and printers. The 3MF consortium was launched by Microsoft in 2015, a Joint Development Project with eleven industrial members including HP, Siemens, Stratasys, Dassault Systems, netfabb, SLM solutions and Autodesk. Like AMF but aiming for "full capabilities", 3MF can represent the physical objects description in a mark-up format with richer external and internal information, aiming to be compatible across printers (All 3DP, 2015). 3MF does not support solid modelling such as B-Rep, NURBS and STEP, rather serving as an unambiguous geometry focused information-rich export format for these systems. Over time, if this becomes a critical factor, the 3MF consortium will develop a 3MF extension to support it.

8 Potential applications of FGAM

8.1 General

AM has thrived substantially in the over the past decade in particular areas of product and small scale applications[5]. FGAM parts have the potential to be aesthetically pleasing through the incorporation of customisable colour gradients, as well as structurally superior and environmentally efficient[54]. FGAM can be used to produce products whereby the part consists of a combination of dissimilar functions (e.g. hardness and toughness[30][43]). End products can be classified into the industrial market and

 © ISO/ASTM International 2020 – All rights reserved

consumer market[5]. The industrial market includes medical, dental, aerospace, automotive, defence and power generation whereas the consumer market includes home accessories, fashion and for the creative industry. The key sectors identified for FGAM adoption are targeting on markets that demand customized geometry[20] and where reliable mechanical, thermal or chemical properties are required[43], such as medical devices and implants and for aerospace industries[50].

8.2 Biomedical applications

The medical and dental industry has established itself as a strong sector for the application of FGAM that could bring contribution towards the creation of assistive, surgical and prosthetic devices, surgical implants, and scaffolds for tissue engineering and graded porosity to encourage tissue growth and encourage healing. The level of control afforded by automated AM techniques enables highly customisable and complex biologically-inspired design especially for the patient from CT or MRI scan data[29]. Most skeleton structures are trabecular with internal arrangements according to their function and position. For example, long bone structures are hollow but not completely empty so that it is lightweight and yet strong. One particular application is the Osteochondral Scaffold (which can be applied for osteoarthritis), where there is a gradual transition between bone and cartilage which scaffolds could be manufactured using an AM bio plotter with capabilities of depositing hydrogels, biopolymers and ceramic materials[11]. The current challenge is to develop reliable modelling tools to ensure the functionality of parts. Bio-adaptable dental implants that mimic the shape of natural teeth can employ Functionally Graded Porosity (FGP) to optimize the local mechanical behaviour of the material at the root to minimize the stress, producing healthier and faster osseointegration which leads to longer implant life and faster healing time. Advanced Abutment Design (AAD) by employing FGP at the abutment part of the implant can also contribute to a more natural bite feel and enhances dentition[67].

8.3 Aerospace applications

FGMs were originally developed for the aerospace industry. The use of FGAM is an enabling technology to reduce the weight or for Topology Optimisation with improved functionality, suitable for use in space plane structures and rocket engine components, thereby leading to improved buy-to-fly ratio of metallic components, improved fatigue properties and surface finishing[5]. Other novel applications include spacecraft truss structures, heat exchange panels, reflectors, solar panels, camera housing, turbine wheels, nose caps, the leading edge of missiles and space shuttles[43].

8.4 Consumer markets

The carpal skin is a prototype for a protective glove to protect against carpal tunnel syndrome. It demonstrates a new approach to medical wrist splints. The single-continuous surface of hard and soft materials is locally modulated by mapping the pain-profile of a patient to fit with the user's anatomical and physiological requirements. It serves as both structure and skin to distinctly cater for structural support and corporeal performance on each side, limiting movement in a customized fashion[60].

The minotaur head with lamella was designed by Reference [54] and [58] as a protective shock absorbent helmet being able to flex and deform to provide comfort and high levels of mechanical compliance. The head shield introduces variable thickness of the shell with a composition of soft and stiff materials informed by anatomical and physiological data derived from real human skull data. Medical scan data of a human head was used and medical imagining software simulating the hard tissue (skull) and the soft tissue (skin and muscle) make up the bone-to-skin threshold for the helmet thickness and material composition according to its biological counterparts such that the bony perturbations in the skull are shielded with soft lamellas. Digital anisotropy was explored by controlling variation of geometrical and material patterns of varying elastic moduli parameters. Another fashion-inspired product is Anthozoa, which is a woman's cape made up of AM barnacles using hard white acrylic pieces, topped with soft black polyurethane rubber. The AM panels are laid over a steel cage padded with polyester batting and lined with cotton twill and silk satin[49].

STANDARDSISO.COM : Click to view the full PDF of ISO/ASTM TR 52912:2020