INTERNATIONAL STANDARD

ISO 4126-10

First edition
2010-10-01

Safety devices for protection against excessive pressure —

Part 10: Sizing of safety valves for gas/liquid two-phase flow

Dispositifs de sécurité pour protection contre les pressions excessives —

Partie 10: Dimensionnement des soupapes de sûreté pour les débits diphasiques gaz/liquide

STANDARDSISO.COM : Click to view the full PDF of ISO 4126-10:2010

Reference number
ISO 4126-10:2010(E)

© ISO 2010

PDF disclaimer

This PDF file may contain embedded typefaces. In accordance with Adobe's licensing policy, this file may be printed or viewed but shall not be edited unless the typefaces which are embedded are licensed to and installed on the computer performing the editing. In downloading this file, parties accept therein the responsibility of not infringing Adobe's licensing policy. The ISO Central Secretariat accepts no liability in this area.

Adobe is a trademark of Adobe Systems Incorporated.

Details of the software products used to create this PDF file can be found in the General Info relative to the file; the PDF-creation parameters were optimized for printing. Every care has been taken to ensure that the file is suitable for use by ISO member bodies. In the unlikely event that a problem relating to it is found, please inform the Central Secretariat at the address given below.

STANDARDSISO.COM : Click to view the full PDF of ISO 4126-10:2010

COPYRIGHT PROTECTED DOCUMENT

© ISO 2010

All rights reserved. Unless otherwise specified, no part of this publication may be reproduced or utilized in any form or by any means, electronic or mechanical, including photocopying and microfilm, without permission in writing from either ISO at the address below or ISO's member body in the country of the requester.

ISO copyright office
Case postale 56 • CH-1211 Geneva 20
Tel. + 41 22 749 01 11
Fax + 41 22 749 09 47
E-mail copyright@iso.org
Web www.iso.org

Published in Switzerland

 © ISO 2010 – All rights reserved

Contents

Page

Foreword iv

Introduction v

1 Scope 1

2 Normative references 1

3 Terms and definitions 1

4 Symbols and abbreviated terms 7

5 Application range of the method 12
5.1 General 12
5.2 Limitations of the method for calculating the two-phase mass flux in safety valves 12
5.3 Limitations of the method for calculating the mass flow rate required to be discharged 13

6 Sizing steps 14
6.1 General outline of sizing steps 14
6.2 Step 1 — Identification of the sizing case 15
6.3 Step 2 — Flow regime at safety valve inlet 16
6.4 Step 3 — Calculation of the flow rate required to be discharged 21
6.5 Step 4 — Calculation of the dischargeable mass flux through a safety valve 28
6.6 Step 5 — Proper operation of safety valves connected to inlet and outlet lines 34

Annex A (informative) **Identification of sizing scenarios** 38

Annex B (normative) **Sizing of a safety valve** 39

Bibliography 44

STANDARDSISO.COM : Click to view the full PDF of ISO 4126-10:2010

© ISO 2010 – All rights reserved

Foreword

ISO (the International Organization for Standardization) is a worldwide federation of national standards bodies (ISO member bodies). The work of preparing International Standards is normally carried out through ISO technical committees. Each member body interested in a subject for which a technical committee has been established has the right to be represented on that committee. International organizations, governmental and non-governmental, in liaison with ISO, also take part in the work. ISO collaborates closely with the International Electrotechnical Commission (IEC) on all matters of electrotechnical standardization.

International Standards are drafted in accordance with the rules given in the ISO/IEC Directives, Part 2.

The main task of technical committees is to prepare International Standards. Draft International Standards adopted by the technical committees are circulated to the member bodies for voting. Publication as an International Standard requires approval by at least 75 % of the member bodies casting a vote.

Attention is drawn to the possibility that some of the elements of this document may be the subject of patent rights. ISO shall not be held responsible for identifying any or all such patent rights.

ISO 4126-10 was prepared by Technical Committee ISO/TC 185, *Safety devices for protection against excessive pressure*.

ISO 4126 consists of the following parts, under the general title *Safety devices for protection against excessive pressure*:

— *Part 1: Safety valves*

— *Part 2: Bursting disc safety devices*

— *Part 3: Safety valves and bursting disc safety devices in combination*

— *Part 4: Pilot-operated safety valves*

— *Part 5: Controlled safety pressure-relief systems (CSPRS)*

— *Part 6: Application, selection and installation of bursting disc safety devices*

— *Part 7: Common data*

— *Part 9: Application and installation of safety devices excluding stand-alone bursting disc safety devices*

— *Part 10: Sizing of safety valves for gas/liquid two-phase flow*

STANDARDSISO.COM : Click to view the full PDF of ISO 4126-10:2010

 © ISO 2010 – All rights reserved

Introduction

Well-established recommendations exist for the sizing of safety devices and the connected inlet and outlet lines for steady-state, single-phase gas/vapour or liquid flow. However, in the case of a two-phase vapour/liquid flow, the required relieving area to protect a system from overpressure is larger than that required for single-phase flow when the same vessel condition and heat release are considered. The requirement for a larger relief area results from the fact that, in two-phase flow, the liquid partially blocks the relieving area for the vapour flow, by which most of the energy is removed by evaporation from the vessel.

This part of ISO 4126 includes a widely usable engineering tool for the sizing of the most typical safety valves in fluid services encountered in various industrial fields. It is based on the omega parameter method, which is extended by a thermodynamic non-equilibrium parameter. Without this extension for considering non-equilibrium, the proposed method is in accordance with API RP 520. A balance is attempted between the accuracy of the method and the unavoidable uncertainties in the input and property data under the actual sizing conditions. There are other sizing methods available, which are referred to in this part of ISO 4126.

In case of two-phase flow, the fluid state and, hence, the mass flow rate required to be discharged are dependent on the size of the safety valve. Furthermore, the two-phase mass flow rate through a safety valve essentially depends on the mass flow quality (mass fraction of vapour) of the fluid at the inlet of the valve. Because these parameters are, in most cases, not readily at hand during the design procedure of a relief device, this part of ISO 4126 also includes a comprehensive procedure that covers the determination of the fluid-phase composition at the safety valve inlet. This fluid-phase composition depends on a scenario that leads to the pressure increase. Therefore, the recommended sizing procedure starts with the definition of the sizing case and includes a method for the prediction of the mass flow rate required to be discharged and the resulting mass flow quality at the inlet of the safety valve.

If flow is confirmed to be single-phase up to the narrowest flow cross-section, it is appropriate to use ISO 4126-1. The equations of ISO 4126-1 are also included in this part of ISO 4126, modified to SI units, to calculate the flow rates at the limiting conditions of single-phase flow.

STANDARDSISO.COM : Click to view the full PDF of ISO 4126-10:2010

© ISO 2010 – All rights reserved

STANDARDSISO.COM : Click to view the full PDF of ISO 4126-10:2010

Safety devices for protection against excessive pressure —

Part 10:
Sizing of safety valves for gas/liquid two-phase flow

STANDARDSISO.COM : Click to view the full PDF of ISO 4126-10:2010

1 Scope

This part of ISO 4126 specifies the sizing of safety valves for gas/liquid two-phase flow in pressurized systems such as reactors, storage tanks, columns, heat exchangers, piping systems or transportation tanks/containers. The possible fluid states at the safety valve inlet that can result in two-phase flow are given in Table 1.

NOTE The expression “safety valve” is a synonym for valves as described in ISO 4126-1, ISO 4126-4 and ISO 4126-5.

Table 1 — Possible fluid state at the inlet of the safety valve that can result in two-phase flow

Fluid state at valve inlet	Cases	Examples
liquid	subcooled (possibly flashing in the safety valve) saturated with dissolved gas	cold water boiling water CO_2/water
gas/vapour	near saturated vapour (possibly condensing in the safety valve)	steam
gas/liquid	vapour/liquid non-evaporating liquid and non-condensable gas (constant quality) gas/liquid mixture, when gas is desorbed or produced	steam/water air/water

2 Normative references

The following referenced documents are indispensable for the application of this document. For dated references, only the edition cited applies. For undated references, the latest edition of the referenced document (including any amendments) applies.

ISO 4126-1, *Safety devices for protection against excessive pressure — Part 1: Safety valves*

3 Terms and definitions

For the purposes of this document, the terms and definitions given in ISO 4126-1 and the following apply.

3.1
pressurized system
equipment such as reactors, storage tanks, columns, heat exchangers, piping systems and transport tanks/containers being protected against impermissible pressure accumulation by a safety valve

© ISO 2010 – All rights reserved

3.2 Pressure

NOTE 1 See Figures 1 a) and 1 b) for an illustration of the relationship of the pressures defined in 3.2.1 to 3.2.7.

NOTE 2 In contrast to the definition used in other parts of this International Standard, for example ISO 4126-1, all pressures are absolute pressures and not gauge pressures.

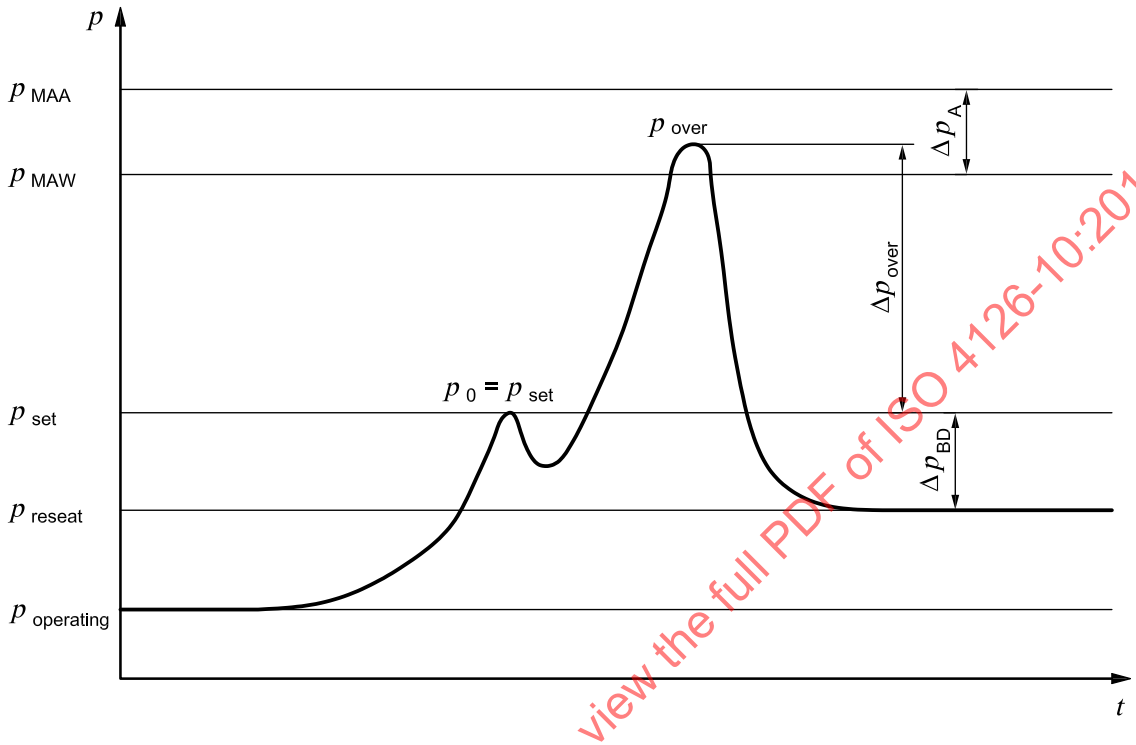

a) Pressure history of a typical tempered reaction system that is adequately sized

Figure 1 — Relationship of the defined pressures (*continued*)

STANDARDSISO.COM : Click to view the full PDF of ISO 4126-10:2010

© ISO 2010 – All rights reserved

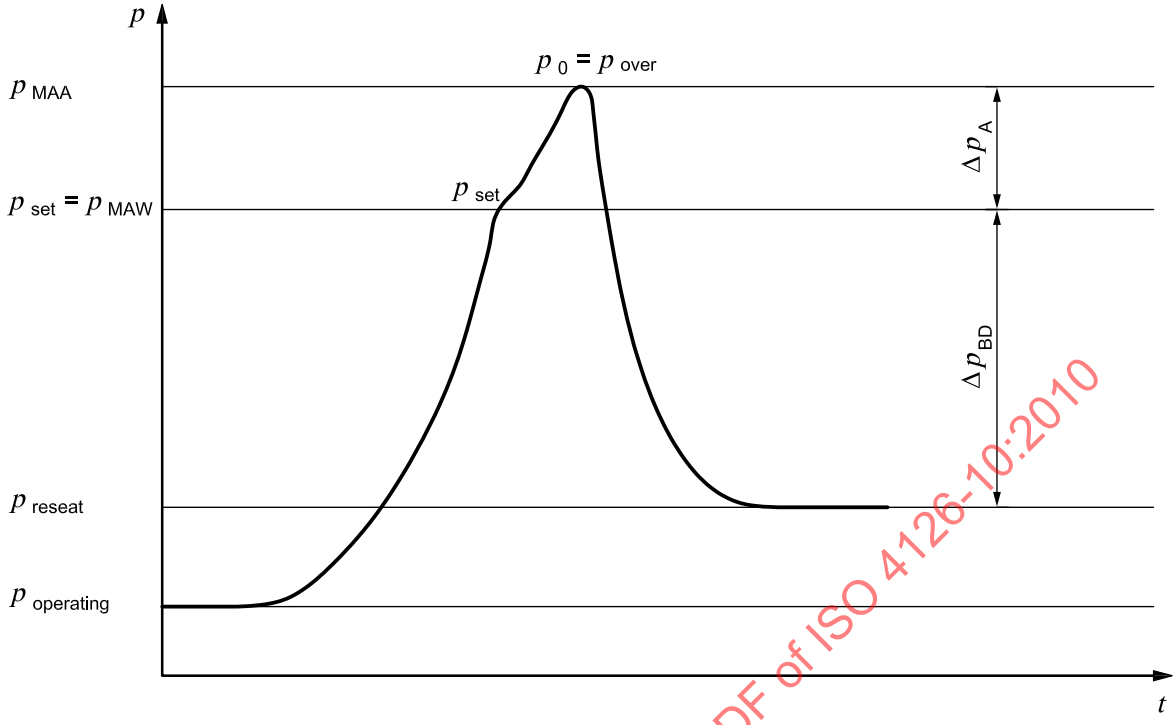

b) Typical pressure history for an externally heated gas vented system

Key

p_{MAA}	maximum allowable accumulated pressure	p_0	sizing pressure equal to p_{set} as shown in Figure 1 a) and equal to p_{over} as shown in Figure 1 b)
p_{MAW}	maximum allowable working absolute pressure	p_{over}	overpressure
p_{set}	opening pressure	Δp_A	maximum allowable accumulation
p_{reseat}	reseating pressure	Δp_{over}	change in overpressure
$p_{operating}$	operating pressure		
Δp_{BD}	blowdown		

Figure 1 — Relationship of the defined pressures

3.2.1
maximum allowable working absolute pressure
p_{MAW}
maximum pressure permissible at the top of a pressurized system in its operating position for designated temperature

3.2.2
maximum allowable accumulated pressure
p_{MAA}
sum of the maximum allowable working pressure and the maximum allowable accumulation

NOTE The maximum allowable accumulation is established by applicable code for operating and fire contingencies.

3.2.3
maximum allowable accumulation
Δp_A
pressure increase over the maximum allowable working pressure of a pressurized system during discharge through the safety valve

NOTE The maximum allowable accumulation is expressed in pressure units or as a percentage of the maximum allowable working pressure.

STANDARDSISO.COM : Click to view the full PDF of ISO 4126-10:2010

© ISO 2010 – All rights reserved

3.2.4
opening pressure
p_{set}
predetermined absolute pressure at which a safety valve under operating conditions at the latest commences to open

NOTE 1 The opening pressure is the set pressure defined in ISO 4126-1 expressed as absolute pressure.

NOTE 2 See Figures 1 a) and 1 b) for details.

3.2.5
absolute overpressure
Δp_{over}
pressure increase over the opening pressure of the safety valve, p_{set}

NOTE 1 The maximum absolute overpressure is the same as the maximum accumulation, Δp_A, when the opening pressure of the safety valve is set at the maximum allowable working pressure of the pressurized system.

NOTE 2 The absolute overpressure is expressed in pressure units or as a percentage of the opening pressure.

3.2.6
overpressure
p_{over}
maximum pressure in the pressurized system during relief, i.e. pressure less or equal to the maximum accumulated pressure

3.2.7
sizing pressure
p_0
pressure at which all property data, especially the compressibility coefficient, ω, are calculated for sizing the safety valve

NOTE In the case of tempered and hybrid reactive systems, the sizing pressure shall be equal to the opening pressure. In the case of non-reactive and gassy systems, the designer may choose a higher value for the sizing pressure, but it shall not exceed the maximum allowable accumulated pressure.

3.2.8
critical pressure
p_{crit}
fluid-dynamic critical pressure occurring in the narrowest flow cross-section of the safety valve and/or at an area enlargement in the outlet line

NOTE At this pressure, the mass flow rate approaches a maximum at a given sizing condition in the pressurized system. Any further decrease of the downstream pressure does not increase the flow rate further. Usually, the critical pressure occurs in the safety valve, either in the valve seat, inlet nozzle and/or valve body. In long safety valve outlet lines, multiple critical pressures can also occur.

3.2.9
critical pressure ratio
η_{crit}
ratio of critical pressure to the sizing pressure

3.2.10
back pressure
p_b
pressure that exists at the outlet of a safety valve as a result of pressure in the discharge system

NOTE Back pressure can be either constant or variable; it is the sum of superimposed and built-up back pressure.

STANDARDSISO.COM : Click to view the full PDF of ISO 4126-10:2010

 © ISO 2010 – All rights reserved

3.2.11
built-up back pressure
pressure existing at the outlet of the safety valve caused by flow through the valve and discharge system

3.2.12
superimposed back pressure
pressure existing at the outlet of the safety valve at the time when the device is required to operate

NOTE Superimposed back pressure is the result of pressure in the discharge system from other sources.

3.2.13
inlet pressure loss
Δp_{loss}
irrecoverable pressure decrease due to flow in the piping from the equipment that is protected to the inlet of the safety valve

3.2.14
blowdown
Δp_{BD}
difference between opening and reseating pressure

NOTE Blowdown is normally stated as a percentage of the opening pressure.

3.3 Flow rate

3.3.1
mass flow rate required to be discharged from a pressurized system
$Q_{\text{m,out}}$
mass flow rate required to be discharged from a pressurized system, such that the pressure does not exceed maximum allowable accumulated pressure in the pressurized system during relief

3.3.2
feed mass flow rate into the pressurized system
$Q_{\text{m,feed}}$
maximum mass flow rate through a feed line or control valve fed into the pressurized system being protected

3.3.3
dischargeable mass flux through the safety valve
$\dot{m}_{\text{SV}}$
mass flow rate per unit area through a safety valve at the sizing conditions calculated by means of the certified discharge coefficients for gas and liquid flow

NOTE See Equation (35).

3.3.4
discharge coefficient for gas and liquid flow
$K_{\text{dr,g}}$ ⟨for gas⟩
$K_{\text{dr,l}}$ ⟨for liquid⟩
correction factor defined by the ratio of the theoretically dischargeable mass flux through the safety valve to an experimentally determined mass flux through a valve of the same manufacturer's type

NOTE The discharge coefficient is related to the valve seat cross-section and accounts for the imperfection of flow through a safety valve compared to that through a reference model (ideal nozzle). Certified values for gas and liquid flow, K_{d}, are usually supplied by valve manufacturers or determined by experiment. Rated discharge coefficients K_{dr}, equal to 0,9 K_{d}, are used to calculate the safety valve sizing area.

STANDARDSISO.COM : Click to view the full PDF of ISO 4126-10:2010

© ISO 2010 – All rights reserved

3.4 Flow area

3.4.1
safety valve sizing area
A_0
most essential result of the sizing procedure in accordance with this part of ISO 4126 required to select an adequately sized safety valve

NOTE It is important that the rated discharge coefficient and the dischargeable mass flux through the safety valve be related to this specific area. The sizing area is defined as the valve seat area.

3.4.2
effective flow area of the feed line or the control valve
A_{feed}
discharge flow area of a feed line or control valve in the line to the pressurized system

3.5 Fluid state

3.5.1
gas/liquid mixture
fluid mixture composed of both a liquid part and a gas part, in which the gas is not necessarily of the same chemical composition as the liquid

3.5.2
tempered system
fluid system in which some energy is removed from the liquid phase by evaporation or flashing

3.5.3
gassy system
fluid system in which permanent gas is generated (e.g. by chemical reaction or by evolution from solution) and in which no significant amount of energy is removed from the liquid by evaporation at the sizing conditions

3.5.4
hybrid system
fluid system that exhibits characteristics of both tempered and gassy systems to a significant extent at the sizing conditions

3.5.5
thermal runaway reaction
uncontrolled exothermic chemical reaction

3.6
thermodynamic critical pressure
p_c
state property, together with thermodynamic critical temperature, at the thermodynamic critical point

3.7
thermodynamic critical temperature
T_c
state property, together with thermodynamic critical pressure, at the thermodynamic critical point

3.8
sizing temperature
T_0
temperature of the pressurized system at the sizing conditions

STANDARDSISO.COM : Click to view the full PDF of ISO 4126-10:2010

 © ISO 2010 – All rights reserved

3.9
overtemperature
T_{over}
maximum temperature in the pressurized system during relief

3.10
saturation temperature difference
ΔT_{over}
difference between the saturation temperature at the maximum pressure during relief, p_{over}, and the saturation temperature at the sizing pressure, p_0

3.11
sizing condition
condition in the pressurized system defined by the sizing pressure and sizing temperature

3.12
critical filling threshold
ϕ_{limit}
maximum initial liquid filling level (liquid hold-up) in the pressurized system at the sizing conditions for which single-phase gas or vapour flow occurs during venting

NOTE For higher filling levels, two-phase flow is assumed to occur.

3.13
initial liquid filling level
ϕ_0
initial liquid filling level (liquid hold-up) in the pressurized system at the sizing conditions

3.14
inlet line
piping and associated fittings connecting the pressurized system to the safety valve inlet

3.15
outlet line
piping and associated fittings connecting the safety valve outlet to a containment system or the atmosphere

STANDARDSISO.COM : Click to view the full PDF of ISO 4126-10:2010

4 Symbols and abbreviated terms

Variable	Definition	Unit
A_{feed}	effective flow area of the feed line or the control valve	m^2
A_{fire}	total wetted surface area exposed to a fire	m^2
A_{heat}	area of heat exchange in the pressurized system in case of external heat input	m^2
A_0	minimum required safety valve seat area (safety valve sizing area)	m^2
A_v	cross-sectional area in a vertical cylindrical vessel	m^2
B_{heat}	(maximum) overall heat transfer coefficient; see Equation (23)	$W/(m^2 \cdot K)$
C	flow coefficient	—
c_p	specific heat capacity at constant pressure	J/(kg·K)
D	inner vessel diameter of a vertical cylindrical vessel	m
$\frac{dp}{dt}$	rate of pressure increase in the pressurized system	Pa/s

© ISO 2010 – All rights reserved

Variable	Definition	Unit
$\frac{dT}{dt}$	reaction self-heat rate inside the pressurized system	K/s
F	environmental factor for heat input from fire (see 6.4.3.2)	—
g_n	acceleration due to gravity	m/s^2
H_l	height of liquid level in a vertical cylindrical vessel (bottom of vessel to liquid level)	m
k_∞	correlating parameter to calculate the characteristic bubble-rise velocity	—
$K_{dr,2ph}$	two-phase flow valve discharge coefficient	—
$K_{dr,g}$	certified valve discharge coefficient for single-phase gas/vapour flow	—
$K_{dr,l}$	certified valve discharge coefficient for single-phase liquid flow	—
K_{vs}	liquid discharge factor for fully opened control valve in the feed line	m^3/h
$\dot{m}$	mass flux	kg/(m^2·s)
$\dot{m}_{SV}$	dischargeable mass flux through the safety valve	kg/(m^2·s)
M_0	total liquid mass in the pressurized system at the sizing conditions	kg
M	molecular mass	kg/kmol
N	boiling delay factor accounting for thermodynamic non-equilibrium	—
p	pressure in the pressurized system	Pa
p_b	back pressure	Pa
p_c	thermodynamic critical pressure	Pa
p_{crit}	fluid-dynamic critical pressure	Pa
p_{MAW}	maximum allowable working absolute pressure	Pa
p_{MAA}	maximum allowable accumulated pressure	Pa
p_0	sizing pressure	Pa
p_{over}	maximum pressure in a pressurized system during relief; see Figures 1 a) and 1 b)	Pa
p_{set}	opening pressure	Pa
q_{fire}	dimensionless fire exposure flux	—
$Q_{m,out}$	mass flow rate required to be discharged from a pressurized system	kg/s
$Q_{m,feed}$	feed mass flow rate into the pressurized system	kg/s
$Q_{m,SV}$	dischargeable mass flow rate through the safety valve	kg/s
$\dot{Q}$	heat input into the pressurized system, either by runaway reaction or by external heating	W
$\dot{Q}^*_{acc}$	ratio of the sensible heat to the latent heat	—
$\dot{Q}^*_{in}$	ratio of total heat rate input to energy removed per unit time by evaporation	—
$\dot{Q}^*_{mean}$	average dimensionless heat input; see Table 2, Equation (50)	—
$\dot{Q}_0$	heat rate into the pressurized system at the sizing conditions; see Table 2, Equation (52)	W
R	universal gas constant (8 314,2 J/(kmol·K)	J/(kmol·K)

STANDARDSISO.COM : Click to view the full PDF of ISO 4126-10:2010

© ISO 2010 – All rights reserved

Variable	Definition	Unit
T	temperature in the pressurized system	K
T_c	thermodynamic critical temperature	K
T_{heat}	maximum possible temperature of the external heat source	K
T_0	temperature of the pressurized system at the sizing conditions	K
T_{over}	maximum temperature in the pressurized system during relief	K
$u_{g,0}$	superficial gas velocity in the free-board gas volume of a vertical cylindrical vessel at the sizing conditions	m/s
u_∞	characteristic bubble-rise velocity of the gas/vapour in the liquid	m/s
v	specific volume in the pressurized system	m^3/kg
V	volume of the pressurized system	m^3
$\dot{x}$	mass flow quality, i.e. the ratio of the gas mass flow rate to the total mass flow rate of a two-phase mixture	—
Z	real gas factor	—
ε_0	void fraction in the pressurized system at the sizing conditions for a homogeneous two-phase mixture	—
ε_{seat}	void fraction in the narrowest cross-section; see Equation (37)	—
η	pressure ratio, either η_{crit} or η_b	—
η_b	ratio of the safety valve back pressure to the sizing pressure	—
η_{crit}	critical pressure ratio	—
η_S	ratio of the saturation pressure corresponding to the sizing temperature and the sizing pressure (measure of liquid subcooling), see Equation (55)	—
κ	isentropic coefficient	—
ρ	fluid density	kg/m^3
ρ_{H_2O}	density of water during experiments to measure the K_{vs} value at a temperature of 5 °C	kg/m^3
σ	surface tension	N/m
ϕ_{limit}	critical filling threshold	—
ϕ_0	initial liquid filling level at the sizing conditions	—
ω	compressibility coefficient	—
ω_{eq}	compressibility coefficient at equilibrium condition ($N = 1$)	—
Γ	gas production rate per unit mass of liquid, i.e. the gas mass flow rate per unit of liquid mass inventory in the pressurized system	(kg/s)/kg
Δh_v	latent heat of vaporization	J/kg
Δp	pressure drop in the inlet or outlet line	Pa
Δp_A	maximum allowable accumulation (accumulation, as defined in ISO 4126-1)	Pa
Δp_{feed}	pressure loss between the outlet of the control valve in the feed line and the pressurized system	Pa
Δp_{H_2O}	pressure drop across a control valve during experiments to measure the K_{vs} value defined at a pressure difference of 10^5 Pa	Pa

STANDARDSISO.COM : Click to view the full PDF of ISO 4126-10:2010

© ISO 2010 – All rights reserved

Variable	Definition	Unit
Δp_{loss}	inlet line pressure loss	Pa
Δp_{over}	absolute overpressure	Pa
ΔT_{over}	saturation temperature difference	K
Ω	dynamic viscosity	Pa·s

Index	Meaning
0	sizing condition
c	thermodynamic critical property
crit	critical condition with respect to flow
CV	upstream of the control valve
exit	exit of the piping system
feed	into the pressurized system
g	gas phase
i	liquid mixture component
ideal	theoretically perfect (adiabatic, frictionless)
j	identification of a particular liquid mixture component
l	liquid phase
MAA	maximum allowable accumulated condition
MAW	maximum allowable working condition
max	maximal value
mean	average between set condition and condition at maximum allowable accumulated pressure
out	dischargeable from the pressurized system
red	reduced condition, i.e. condition related to the thermodynamic critical property
seat	condition in the narrowest flow cross-section of the valve, e.g. the valve seat
set	set condition
loss	usually pressure loss
fire	heat externally by fire
heat	external heat input (source)
b	back
over	overpressure or overtemperature
H_2O	water
in	inlet
2ph	two-phase flow
s	subcooling
∞	characteristic bubble-rise property in the liquid phase
limit	limiting value (threshold)
operating	operating condition

STANDARDSISO.COM : Click to view the full PDF of ISO 4126-10:2010

© ISO 2010 – All rights reserved

Index	Meaning
reseat	reseating condition
sat	saturation condition of the liquid phase
SV	through the safety valve
r	derated value (see 3.3.4)

Exponent	Meaning
a	exponent in the equation for the boiling delay coefficient, N; see Equation (41)
*	dimensionless

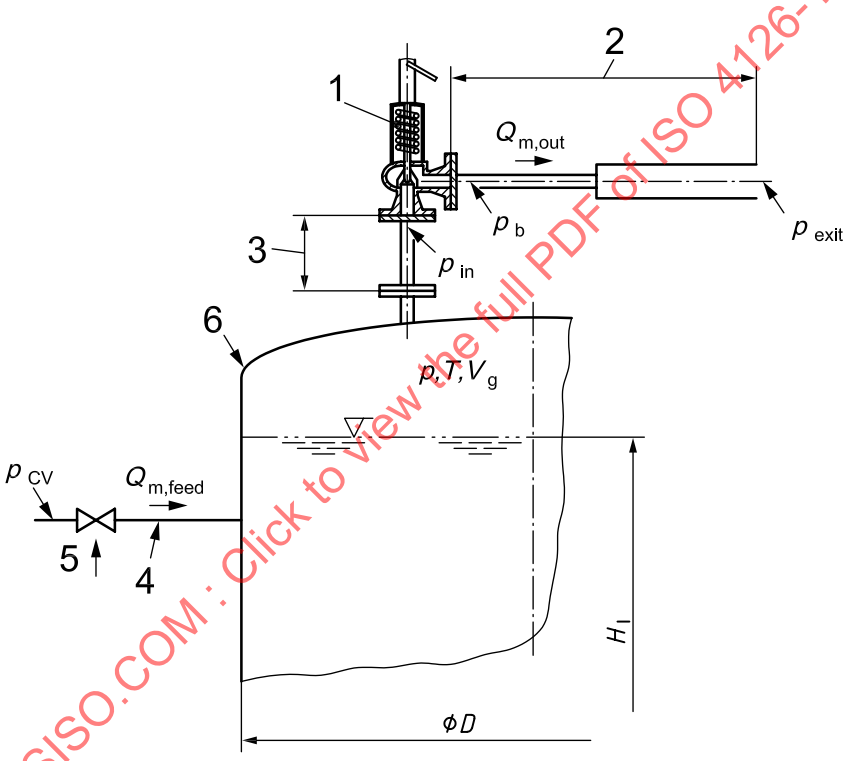

Key

1 safety valve
2 outlet line
3 inlet line
4 feed line
5 control valve
6 pressurized system

Figure 2 — Safety valve in a pressurized system

STANDARDSISO.COM : Click to view the full PDF of ISO 4126-10:2010

© ISO 2010 – All rights reserved

5 Application range of the method

5.1 General

A homogeneous, non-equilibrium flow model for a single-component gas/liquid mixture is used for the valve sizing. Multi-component mixtures in the gas or liquid phase are considered as single-component systems with (averaged) property data equal to those of the mixture. The flow is assumed to be in a quasi-steady state. It is recommended to remain within the application range of the method, as given in 5.2 and 5.3.

5.2 Limitations of the method for calculating the two-phase mass flux in safety valves

5.2.1 General

The limits for application of the calculation model used in this part of ISO 4126 are given in 5.2.2 to 5.2.4.

5.2.2 Flashing flow

The method is accurate for systems in which either or both of the following conditions is true.

a) The overtemperature is less than 90 % of the fluid's thermodynamic critical temperature as given in Equation (1).

b) The overpressure is less than 50 % of the fluid's thermodynamic critical pressure as given in Equation (2).

$$T_{\text{red}} = \frac{T_{\text{over}}}{T_{\text{c}}} < 0{,}9 \tag{1}$$

$$p_{\text{red}} = \frac{p_{\text{over}}}{p_{\text{c}}} < 0{,}5 \tag{2}$$

where

T_{red} is the reduced temperature;

p_{red} is the reduced pressure;

T_{over} is the maximum temperature during relief, expressed in kelvins;

p_{over} is the maximum pressure during relief (maximum accumulated pressure or less), expressed in pascals;

T_{c} is the thermodynamic critical temperature of the fluid, expressed in kelvins;

p_{c} is the thermodynamic critical pressure of the fluid, expressed in pascals.

If both the reduced pressure and temperature are above the specified limits, the property data usually change too rapidly, which can lead to unacceptable errors.

The equations used in the sizing method to predict the properties of the gas/liquid flow lead, in general, to an overestimation of the required valve seat area, when conditions above the limits in Equations (1) and (2) up to the thermodynamic critical point are considered; see Reference [2]. In cases where it is necessary to make the prediction of the valve seat area more precise, the recommendations in Reference [2] should be followed. Additional comments relative to the range of applicability of the method are given in 6.5.1.

The limitations on the model due to the linear approximation of the pressure density relation are discussed in Reference [26].

STANDARDSISO.COM : Click to view the full PDF of ISO 4126-10:2010

 © ISO 2010 – All rights reserved

5.2.3 Flashing flow for mixtures

This method may be applied to multi-component flashing systems whose saturation temperature range does not exceed 100 K, as given in Equation (3) for mixtures of chemically similar liquids:

$$T_{\text{sat},i} - T_{\text{sat},j} < 100 \tag{3}$$

where $T_{\text{sat},i}$ and $T_{\text{sat},j}$ are the saturation temperatures at the sizing pressure for components i and j, expressed in kelvins.

Component i exhibits the highest saturation temperature, and component j the lowest saturation temperature of the mixture.

5.2.4 Dissolved gases

The method proposed cannot be applied directly to cases where significant quantities of gases are dissolved in the fluid being discharged, which is typical in cases of high pressure with gases such as nitrogen or hydrogen dissolved in a liquid.

The presence of dissolved gases can profoundly affect the mixture properties and the mass flow rate through the safety valve and shall be taken into account. For example, the thermodynamic critical conditions of the mixture can be very different from the thermodynamic critical conditions of the pure components in a mixture. This leads to a change of the saturation line. Also, other properties, such as the heat of vaporization, the liquid mixture density (e.g. of polymers), or the liquid mixture viscosity, can be affected. Even small amounts of dissolved gases, which desorb due to the pressure decrease in a non-evaporating liquid flow through a safety valve, can markedly reduce the mass flow rate compared to that in liquid flow only.

If it is required to consider the desorption of gases, it is possible to use the design equations for gassy systems if no other reliable information is available. The time delay (in reaching equilibrium) during the desorption of gases should be neglected. For a conservative calculation, the valve seat area should be estimated with a mass flow quality that would belong to the two-phase gas/liquid mixture in equilibrium at the lowest pressure in the narrowest flow cross-section (homogeneous equilibrium flow between valve inlet and valve seat area). This can be, for example, the critical pressure in the seat area of the safety valve. Because the desorption time delay has been neglected, mass flow quality is overestimated and, hence, the valve seat area is oversized.

5.3 Limitations of the method for calculating the mass flow rate required to be discharged

5.3.1 Rate of temperature and pressure increase

In the case of a runaway reaction, the reaction self-heat rate, expressed in kelvins per second, in the pressurized system at the maximum pressure, p_{over}, during relief should be less than 2 K/s, as given in Equation (4):

$$\left.\frac{\mathrm{d}T}{\mathrm{d}t}\right|_{\text{over}} < 2 \tag{4}$$

This is limited by the method for the flow rate required to be discharged for tempered reactions in 6.4.4.2. Further, the maximum rate of pressure rise is restricted to 20 kPa/s (12 bar/min), as given in Equation (5):

$$\left.\frac{\mathrm{d}p}{\mathrm{d}t}\right|_{\text{over}} < 20 \tag{5}$$

If the reaction self-heat rate and the rate of pressure increase are considerably higher than these values, unfeasible valve sizes can result.

STANDARDSISO.COM : Click to view the full PDF of ISO 4126-10:2010

© ISO 2010 – All rights reserved

Industry experience demonstrates that safety valves should not be used if there is an excessive pressure rise during valve-opening time. Typical spring-loaded valve-opening times are on the order of 80 ms to 120 ms. It is necessary that the rate of pressure increase be slow enough to allow for a full opening of the valve before p_{over} is reached. Therefore, the rate of pressure increase should be limited at least to 10 % absolute overpressure above the opening pressure of the safety valve within the valve-opening time. In most cases, this leads to values higher than the recommended limiting value of 20 kPa/s. For even faster pressure rises, bursting discs can be suitable.

5.3.2 Immiscible liquids

The sizing method might not be directly applicable if immiscible liquids are present in the system, such as in the case of the venting of an emulsion polymerization reactor. In this case, the reaction kinetics developed from dedicated laboratory experiments depend on the particular agitation state, which, in general, cannot be scaled to a technical size; see Reference [22].

6 Sizing steps

6.1 General outline of sizing steps

The sizing of a safety valve vent line system includes the following essential steps (Figure 3):

Step 1: Identification of the sizing case; see 6.2.

All reasonably conceivable deviations from normal plant operation shall be considered to identify the sizing case for the valve. Whether or not it is required to consider malfunction as reasonably possible can depend on the hazard potential and local regulatory requirements. The sizing case is of key importance for the dimensioning of a safety valve and often more important than the type of calculation method. Although it is beyond the scope of this part of ISO 4126 to outline the details of hazard analysis, an introduction is given in 6.2.

Step 2: Determination of the fluid-phase composition at the safety valve inlet (single- or two-phase flow); see 6.3.

Step 3: Calculation of the mass flow rate required to be discharged from the pressurized system; see 6.4.

Step 4: Determination of the dischargeable mass flux through the safety valve; see 6.5.

Step 5: Check of the proper valve operation in vent line systems under plant conditions; see 6.6.

In the preceding steps, the safety valve has been sized without considering any influence of the connected inlet and/or outlet line, which can lead to a deterioration of safety valve capacity or function. Low-frequency opening and closing (pumping) of the valve or a higher-frequency flutter (chatter) can occur. In the latter case, the valve and/or the inlet and outlet line can be damaged.

For the following sizing steps, recommendations and a computational procedure applicable to common engineering practice are given in 6.2 to 6.6.

STANDARDSISO.COM : Click to view the full PDF of ISO 4126-10:2010

 © ISO 2010 – All rights reserved

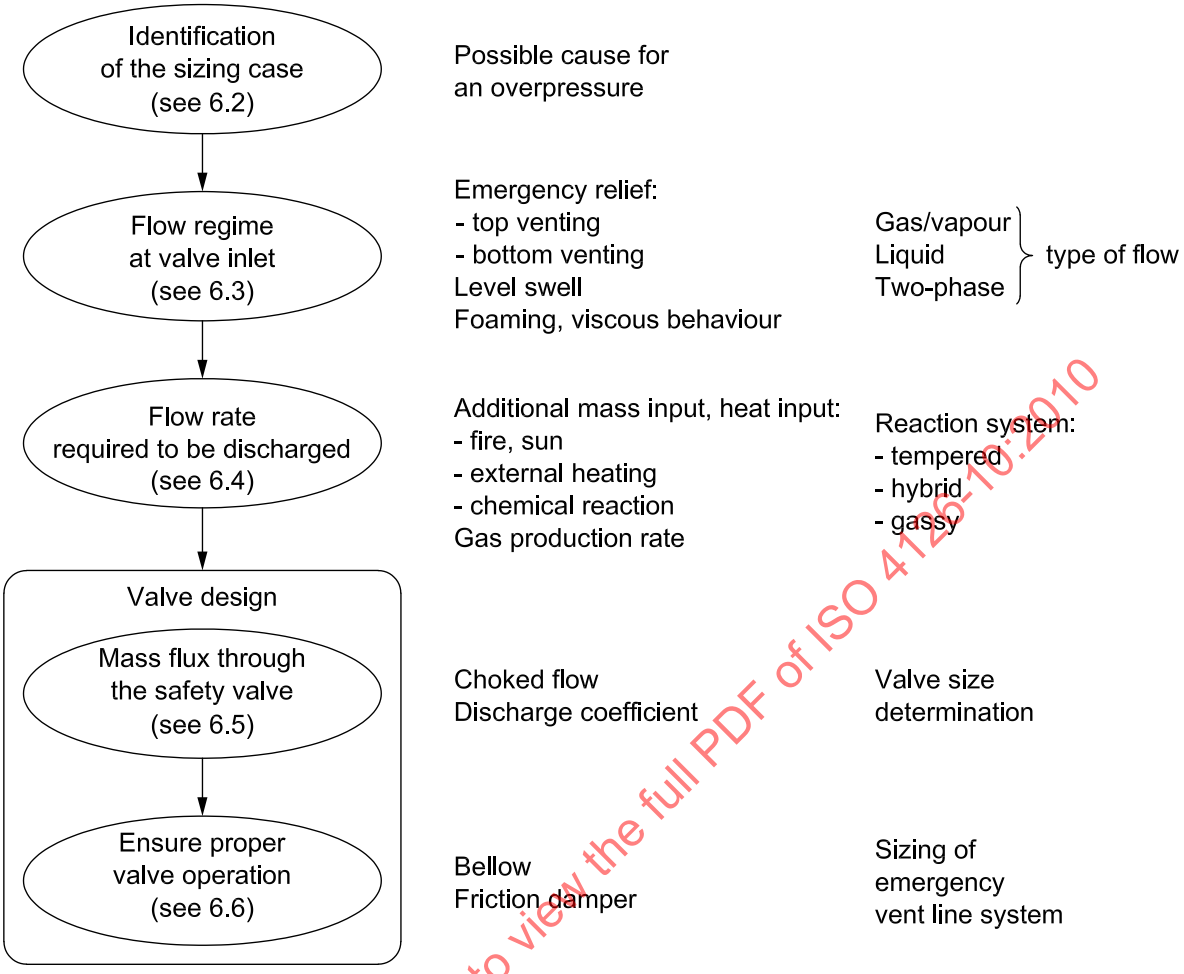

Figure 3 — Procedure of valve sizing

STANDARDSISO.COM : Click to view the full PDF of ISO 4126-10:2010

6.2 Step 1 — Identification of the sizing case

Reasonably conceivable deviations from normal plant operation shall be identified and evaluated relative to their hazardous risk potential using a process hazard assessment and safety evaluation (PHASE); see Reference [3]. Several well established procedures — such as HAZOP (hazard and operability study), see Reference [4]; PHA (preliminary hazard analysis), see Reference [5]; or what-if analysis — or the more quantitative methods — such as fault-tree analysis, see Reference [6]; and event-tree analysis, Reference [7] — are used in practice. These methods are often supplemented by checklists (see Reference [8]) with several levels of detail. All these procedures provide a means to assess the causes for a pressure increase. These causes can be related to changes in mass and energy transfer to or from the pressurized system, or a deviation from the normal reaction system, e.g. when a thermal runaway reaction occurs.

In Table A.1, the most common causes for a pressure rise are summarized. Some of these can occur simultaneously or immediately after one another and, subsequently, it can be necessary to take one or more independent process deviations into account as possible sizing cases for the valve. The actual outline of the possible sizing cases depends on the risk and loss potential that can result from the deviations from normal plant operation. However, the deviations should not be quantified in too conservative a manner. Otherwise, the valve seat area is oversized. This can result in unnecessarily large release flow rates, overloads for the downstream process equipment and, possibly, additional environmental risks.

For further information, see ISO 23251.

© ISO 2010 – All rights reserved

6.3 Step 2 — Flow regime at safety valve inlet

6.3.1 General

For the sizing, it is essential to know whether a two-phase flow occurs at the valve inlet. Subsequently, criteria are given for the identification of the occurrence of two-phase flow.

6.3.2 Phenomenon of level swell

Safety valves are often mounted on the top (gas side) of a vessel. Consider, for example, a system capable of generating vapour during venting (tempered system): the pressure drops immediately when the valve opens due to the release of vapour from the free-board vessel volume. An initially subcooled or saturated liquid superheats, i.e. the temperature remains above the saturation temperature corresponding to the actual pressure. If the vapour production rate exceeds the rate of vapour disengagement across the interface, after a boiling delay time (typically 0,1 s to 1,0 s), bulk evaporation of liquid starts and forces the level to swell. If the mixture reaches the valve inlet, the flow regime changes from single-phase gas to two-phase flow.

Level swell primarily occurs due to limited bubble-rise velocity; the characteristic rise velocity of the gas/vapour in the liquid is designated as u_∞.This phenomenon is especially common in highly viscous liquids and foam systems. Vessels with such contents are, therefore, emptied almost completely during emergency venting. For foaming and highly viscous fluids, this holds even for initial liquid filling levels down to about 15 %; see Reference [9].

In gas-desorbing or -producing systems, analogous phenomena, i.e. desorption delay, level swell, etc., also occur.

In externally heated vessels (e.g. non-reacting, non-heat-generating systems), the vapour bubbles can form at the vessel wall, not in the bulk liquid. This can result in less level swell, but with the possible consequence of single-phase flow relief occurring at lower initial liquid-filling levels.

6.3.3 Influence of liquid viscosity and foaming behaviour on the flow regime

A criterion to distinguish between single-phase and two-phase flow makes use of initial liquid filling level, gas or vapour production rate, liquid viscosity and foaming behaviour. The liquid viscosity shall be considered at the conditions when the maximum allowable accumulated pressure in the pressurized system is reached. For highly viscous liquids ($\Omega_{l,0}$ < 0,1 Pa·s), it is recommended to assume homogeneous venting of the pressurized system; see Figure 4.

In case the foaming behaviour of the liquid is not known from common practice, experiments are required to assess this property at the sizing conditions of the safety valve, as it is difficult to predict the foaming behaviour merely from physical properties alone.

STANDARDSISO.COM : Click to view the full PDF of ISO 4126-10:2010

 © ISO 2010 – All rights reserved

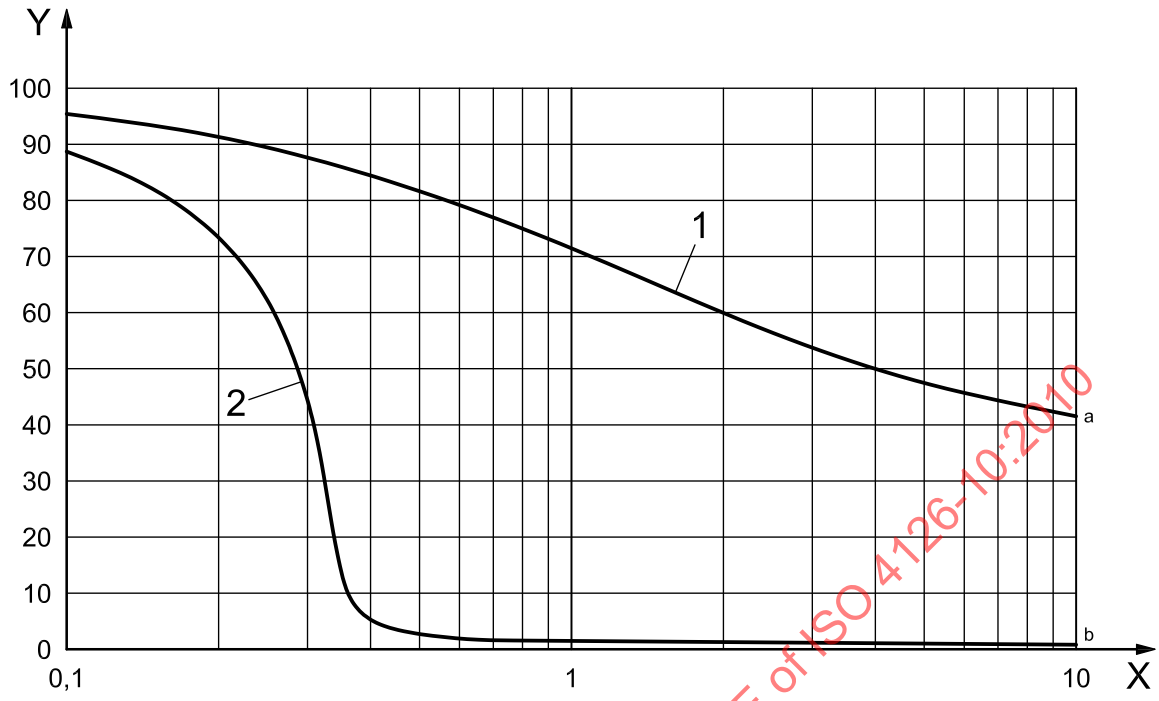

Key

Y critical filling threshold ϕ_{limit}, expressed as a percentage

X dimensionless bubble-rise velocity, equal to $\frac{u_{\text{g,0}}}{u_{\infty}}$

where $u_{\text{g,0}}$ is given by Equation (6) and u_{∞} is given by Equation (7):

$$u_{\text{g,0}} = Q_{\text{m,g,out}} \cdot \frac{v_{\text{g,0}}}{A_{\text{v}}} \tag{6}$$

$$u_{\infty} = k_{\infty} \frac{\left[\sigma_{\text{l,0}} \cdot g_{\text{n}} \left(\rho_{\text{l,0}} - \rho_{\text{g,0}}\right)\right]^{1/4}}{\sqrt{\rho_{\text{l,0}}}} \tag{7}$$

1 non-foaming and aqueous, $\Omega_{\text{l,0}} < 0{,}1$ Pa·s [churn turbulent flow ($k_{\infty} = 1{,}53$)]

2 foaming or viscous, $\Omega_{\text{l,0}} > 0{,}1$ Pa·s [homogeneous flow ($k_{\infty} = 1{,}18$)]

Figure 4 — Flow regime at valve inlet (single-phase or two-phase flow)[23] — Critical filling threshold, ϕ_{limit}, as a function of the dimensionless bubble-rise velocity

STANDARDSISO.COM : Click to view the full PDF of ISO 4126-10:2010

6.3.4 Prediction of the flow regime (gas/vapour or two-phase flow)

6.3.4.1 General

For a top-mounted safety valve, if the initial liquid filling level in the vessel, ϕ_0, exceeds the critical filling threshold, ϕ_{limit}, a two-phase mixture is vented for part of the venting time. When the critical filling threshold is not exceeded, only gas or vapour is discharged. The critical filling threshold is correlated with the superficial gas velocity in the free-board gas volume of a vertical cylindrical vessel at the sizing conditions, $u_{\text{g,0}}$, and the characteristic rise velocity of the produced gas or generated vapour in the liquid, u_{∞} (see Figure 4), which has been verified on a wide range of (non-foaming) fluids; see References [9], [10].

© ISO 2010 – All rights reserved

Two calculation procedures for the determination of the flow regime at the safety valve are distinguished according to the type of heat generation or input:

a) formation of homogeneously distributed bubbles in the liquid, e.g. in case of a thermal runaway reaction, as discussed in 6.3.4.2;

b) formation of bubbles at the inner vessel wall of the pressurized system, e.g. in case of fire or external heating, as discussed in 6.3.4.3.

6.3.4.2 Recommended calculation procedure in case of generation of homogeneously distributed bubbles (e.g. thermal runaway reaction)

To distinguish between single-phase and two-phase flow the following procedure is recommended.

a) Assume that the flow regime at the safety valve inlet is single-phase gas/vapour flow.

b) Determine the gas/vapour mass flow rate required to be discharged from the pressurized system, according to the liquid reaction system, as follows:

1) For a tempered system, the gas/vapour mass flow rate required to be discharged from the pressurized system (see Table 2), $Q_{\mathrm{m,out}}$, expressed in kilograms per second, is given by Equation (8):

$$Q_{\mathrm{m,out}} = \frac{\dot{Q}}{\Delta h_{\mathrm{v,0}}} \cdot \frac{1}{\dot{Q}^{*}_{\mathrm{in}}} \tag{8}$$

where $\dot{Q}^{*}_{\mathrm{in}}$ is calculated iteratively from Equation (9):

$$0 = \dot{Q}^{*}_{\mathrm{acc}} - \dot{Q}^{*}_{\mathrm{in}} + v^{*}\left(\dot{Q}^{*}_{\mathrm{mean}} - \ln\left[\frac{v^{*}\,\dot{Q}^{*}_{\mathrm{mean}}}{\dot{Q}^{*}_{\mathrm{in}}}\right]\right) \tag{9}$$

where

$\dot{Q}$ is the heat input in the pressurized system by a runaway reaction; see Equations (30) and (52); expressed in watts;

$\dot{Q}^{*}_{\mathrm{in}}$ is the ratio of total heat input to energy flow removed by evaporation;

$\dot{Q}^{*}_{\mathrm{acc}}$ is the ratio of sensible heat to latent heat; see Table 2, Equation (48);

v^{*} is the dimensionless specific volume; see Table 2, Equation (45), (46) or (47);

$\dot{Q}^{*}_{\mathrm{mean}}$ is the average dimensionless heat input due to a runaway reaction between set condition and conditions at maximum allowable accumulated pressure; the heat input is related to that at the sizing condition; see Table 2, Equation (50);

$\Delta h_{\mathrm{v,0}}$ is the latent heat of vaporization at the sizing condition, expressed in joules per kilogram.

2) For a gassy system, the gas/vapour mass flow rate required to be discharged from the pressurized system (see Table 2), $Q_{\mathrm{m,out}}$, expressed in kilograms per second, is as given by Equation (10):

$$Q_{\mathrm{m,out}} = \Gamma_0 \cdot M_0 \tag{10}$$

STANDARDSISO.COM : Click to view the full PDF of ISO 4126-10:2010

 © ISO 2010 – All rights reserved

where

Γ_0 is the gas production rate per unit mass of liquid, i.e. the gas mass flow rate per unit of liquid mass inventory in the pressurized system at sizing conditions, expressed in (kilograms per second) per kilogram;

M_0 is the total mass of liquid in the pressurized system, expressed in kilograms.

For reacting systems, Γ_0 should be determined by experimentation. For example, the pressure increase during a runaway reaction in an adiabatic reaction calorimeter is a measure of the gas production rate per unit mass of liquid. The gas production rate shall be the maximum rate expected under adiabatic conditions, given that the system is not tempered and that the temperature rises during venting.

3) For hybrid systems (gas and vapour production), the gas/vapour mass flow rate required to be discharged from the pressurized system, $Q_{\mathrm{m,out}}$, expressed in kilograms per second, is as given by Equation (11):

$$Q_{\mathrm{m,out}} = \frac{\dot{Q}}{\Delta h_{\mathrm{v},0}} + \Gamma_0 \cdot M_0 \tag{11}$$

where

$\dot{Q}$ is the heat input in the pressurized system by a runaway reaction, expressed in watts; see Equations (30) and (52);

$\Delta h_{\mathrm{v},0}$ is the latent heat of vaporization at the sizing condition, expressed in joules per kilogram;

Γ_0 is the gas production rate per unit mass of liquid, i.e. the gas mass flow rate per unit of liquid mass inventory in the pressurized system at the sizing conditions, expressed in (kilograms per second) per kilogram;

M_0 is the total mass of liquid in the pressurized system, expressed in kilograms.

Although the system is tempered by the evaporating liquid, the sizing pressure should be set equal to the maximum allowable accumulated pressure, i.e. $\dot{Q}^*_{\mathrm{in}} = 1$.

c) Using Figure 4, determine the critical filling threshold, ϕ_{limit}, from the superficial gas velocity, $u_{\mathrm{g,0}}$, in the free-board gas volume of a vertical cylindrical vessel and the characteristic rise velocity, u_∞, of the gas/vapour in the liquid. In case of a non-foaming low-viscosity liquid (with viscosity of up to 0,1 Pa·s), the upper curve with $k_\infty = 1{,}53$ applies. For a viscous liquid system (viscosity larger than 0,1 Pa·s) and for a foaming system, the lower curve with $k_\infty = 1{,}18$ is valid. These values apply to vertical vessels with a height-to-diameter ratio of approximately 2:1 to 3:1. Special consideration shall be given for higher height-to-diameter ratios, horizontal or spherical vessels; see Reference [10].

d) Compare the initial liquid filling level, ϕ_0, in the reactor being considered to the critical filling threshold, ϕ_{limit}.

1) Case 1: $\phi_0 \geqslant \phi_{\mathrm{limit}}$

If the initial liquid filling level equals or exceeds the critical filling threshold, two-phase flow should be assumed for sizing the safety valve.

2) Case 2: $\phi_0 < \phi_{\mathrm{limit}}$

Single-phase gas flow should be assumed.

STANDARDSISO.COM : Click to view the full PDF of ISO 4126-10:2010

© ISO 2010 – All rights reserved

This is true only for a safety valve with a discharge capacity less than or equal to the minimum gas flow rate required to be discharged through the valve. In practice, often a valve with a nominal size larger than required is chosen from the standard selection of a valve manufacturer. In this case, the discharge capacity of the safety valve should be limited, for example, by restraining the lift to the required gas flow rate, $Q_{m,out}$, in accordance with ISO 4126-1. Otherwise, if the valve capacity is larger than required, a higher superficial gas velocity, $u_{g,0}$, in the free-board gas volume of a vertical cylindrical vessel results and leads to a lower critical filling threshold; see Figure 4. As a consequence, this can result in a two-phase flow. The valve seat area, A_0, originally sized for single-phase gas flow can then be too small and it can be necessary to re-evaluate it.

In this case, $Q_{m,out}$ should be set equal to the dischargeable gas mass flow rate through the selected safety valve, $Q_{m,SV}$, expressed in kilograms per second, as given in Equation (12):

$$Q_{m,SV} = \dot{m}_{SV,g} \cdot A_0 \tag{12}$$

where

$\dot{m}_{SV,g}$ is the dischargeable gas mass flux through the safety valve, expressed in kilograms per (square metre - second);

A_0 is the safety valve seat area chosen from the standard selection of a valve manufacturer, expressed in square metres.

The dischargeable mass flux through the safety valve should be calculated by using Equation (35) in Table 3 for gas/vapour flow. On using the new dischargeable gas mass flow rate, $Q_{m,SV}$, steps a) to d) should be repeated until the re-evaluated estimated flow regimes correspond. If two-phase flow is identified as the flow regime at the valve inlet, no iteration is necessary.

With respect to Figure 4, the critical filling threshold values for highly viscous or foaming fluids are typically below 10 %. This, in practice, most often leads to the assumption of two-phase flow.

6.3.4.3 Recommended calculation procedure in case of external heating of non-foaming aqueous liquids (e.g. fire exposure and external heat input)

When boiling is due to external heating of the contents of the pressurized system and the fluid is non-foaming, bubbles can be formed mainly at the walls rather than in the bulk of the liquid. Provided that there are no internal baffles within the equipment, recirculation patterns form in the vessel and two-phase flow is less likely than in the case of homogeneously distributed bubble generation, which is addressed in 6.3.4.2; see Reference [11].

For example, in Reference [12], Equations (13) and (14) are given for fire exposure:

$$\phi_{limit} = 1 - \left[2{,}279\,4 \cdot 10^{-4} \cdot \dot{q}_{fire}^{0{,}667} \left(0{,}089 + 1{,}003 \cdot 10^{-7} \cdot \dot{q}_{fire} \right) \cdot \left(\frac{H_l}{D} \right) \right] \tag{13}$$

$$\dot{q}_{fire} = \frac{3{,}218 \cdot 10^5}{(\rho_{g,0} \cdot \Delta h_{v,0} \cdot u_\infty)} \frac{\dot{Q}}{A_{fire}} \tag{14}$$

where

$\dot{q}_{fire}$ is the dimensionless fire exposure flux in aqueous fluids due to fire exposure transferred through the area, A_{fire}, into a vertical cylindrical vessel with no fire heat transfer to the vessel bottom at the sizing conditions;

A_{fire} is the partial surface area of a vertical cylindrical vessel wetted by internal liquid and located within 7,5 m vertically from grade or from any surface capable of sustaining a pool fire, including only the wall and not the bottom of the vessel, expressed in square metres;

STANDARDSISO.COM : Click to view the full PDF of ISO 4126-10:2010

 © ISO 2010 – All rights reserved

u_∞ is the characteristic rise velocity of the gas/vapour in the liquid. The value of this variable is calculated using Equation (7) (see Figure 4) using a value of $k_\infty = 1{,}53$;

$\rho_{g,0}$ is the gas phase density in the pressurized system at the sizing conditions, expressed in kilograms per cubic metre;

$\Delta h_{v,0}$ is the latent heat of vaporization at the sizing condition, expressed in joules per kilogram;

$\dot{Q}$ is the heat input into the pressurized system (a vertical cylindrical vessel in this case) by fire, expressed in watts; see Equation (24);

H_l is the height of liquid level in a vertical cylindrical vessel, expressed in metres;

D is the inner vessel diameter in the free-board gas volume of a vertical cylindrical vessel, expressed in metres;

ϕ_{limit} is the critical filling threshold for the fire exposure.

If $\phi_0 \geqslant \phi_{limit}$, then two-phase flow should be assumed.

These empirical equations are valid only for vertical cylindrical vessels with no fire-heat transfer to the vessel bottom. Also, they neglect any two-phase flow due to droplet entrainment rather than due to level swell. This is important only for low-design-pressure tanks (unpressurized vessels). A method for deciding whether it is required to consider two-phase flow due to entrainment for low-design-pressure tanks is given in Reference [12].

6.4 Step 3 — Calculation of the flow rate required to be discharged

6.4.1 General

In 6.4.2 to 6.4.4, equations are given for predicting the required flow rate to ensure that the vessel pressure remains below the maximum allowable accumulated pressure. The particular set of equations depends on the type of process deviation causing the pressure rise. It is not feasible to cover the whole range of possible deviations within this part of ISO 4126; therefore, only some that are typically encountered in the industry are discussed as examples.

Pressure increase can be caused by:

a) excess flow into the equipment to be protected (e.g. valve malfunction);

b) increased heat input due to fire exposure or external heating; see Table 2;

c) runaway reaction; see Table 2.

6.4.2 Pressure increase caused by an excess in-flow

A typical cause for excess in-flow can be a control valve malfunction in a feed line. In this case, if there is a large pressure difference, flashing can occur in the pressurized system and it is required to discharge a two-phase mixture in order to prevent excess pressure rise. The mass flow quality in front of the safety valve can be calculated by an isenthalpic flash calculation from the inlet pressure of the control valve to the sizing pressure.

So long as the incoming fluid is a pure liquid and does not cause boiling of the liquid already in the pressurized system, the mass flow rate required to be discharged can then be determined via a simplified mass balance equation, whereby credit may be taken for flow out of the protected system via other channels not affected by the feed control valve malfunction, such that the flow rate required to be discharged from the

STANDARDSISO.COM : Click to view the full PDF of ISO 4126-10:2010

© ISO 2010 – All rights reserved

pressurized system, $Q_{m,out}$, expressed in kilograms per second, is as given by Equation (15) (see also the guidelines in Table A.1):

$$Q_{m,out} = \sum Q_{m,feed} \tag{15}$$

where $Q_{m,feed}$ is the feed mass flow rate into the pressurized system, expressed in kilograms per second.

The feed mass flow rate, $Q_{m,feed}$, into the pressurized system can be calculated with the aid of the liquid discharge coefficient, K_{vs}, for the fully opened valve. This coefficient characterizes the effective flow area, A_{feed}, expressed in square metres, of the feed line or control valve of a frictionless valve with the same pressure difference for the same flow rate. For non-evaporating liquid flow through the control valve, this should be calculated as given by Equation (16):

$$\begin{aligned} A_{feed} &\cong \frac{K_{vs}}{3\,600} \cdot \sqrt{\frac{\rho_{H_2O}}{2 \cdot \Delta p_{H_2O}}} \\ &= K_{vs} \cdot C_1 \end{aligned} \tag{16}$$

where

$$C_1 = 1{,}964 \cdot 10^{-5} \cdot \frac{\text{h}}{\text{m}} \tag{17}$$

A_{feed} is the effective flow area, expressed in square metres, of the feed line or control valve;

K_{vs} is the liquid discharge factor for fully opened control valve in the feed line, expressed in cubic metres per hour, as usually given by valve manufacturers;

ρ_{H_2O} is the density of water at the temperature during experiments to measure the K_{vs} value, i.e. at the temperature of 5 °C to 50 °C, i.e. equal to about 1 000 kg/m^3;

Δp_{H_2O} is the pressure drop across a control valve during experiments to measure the K_{vs} value defined at a pressure difference of 10^5 Pa.

The liquid discharge factor, K_{vs}, is usually provided by the manufacturer and equals the water volume flow rate in m^3/h for a pressure drop, Δp_{H_2O}, of 10^5 Pa at a temperature of 5 °C to 50 °C; see IEC 60534-2-1.

The required flow rate for non-flashing liquid flow can then be calculated as given by Equation (18):

$$Q_{m,feed} = A_{feed} \cdot \sqrt{2 \cdot \rho_{l,0} \cdot \left(p_{CV} - \left[p_0 + \Delta p_{feed}\right]\right)} \tag{18}$$

Substituting Equation (16) into Equation (18) allows the expression of the feed mass flow rate into the pressurized system, $Q_{m,feed}$, expressed in kilograms per second, as given in Equation (19):

$$Q_{m,feed} = K_{vs} \cdot C_2 \cdot \sqrt{\rho_{l,0} \cdot \left(p_{CV} - \left[p_0 + \Delta p_{feed}\right]\right)} \tag{19}$$

where

K_{vs} is the liquid discharge factor for fully opened control valve in the feed line, expressed in cubic metres per hour, as usually given by valve manufacturers;

$$C_2 = 2{,}778 \cdot 10^{-5} \cdot \frac{\text{h}}{\text{m}} \tag{20}$$

$\rho_{l,0}$ is the liquid phase density in the pressurized system at the sizing conditions, expressed in kilograms per cubic metre;

p_{CV} is the pressure upstream of the control valve in the feed line, expressed in pascals;

STANDARDSISO.COM : Click to view the full PDF of ISO 4126-10:2010

 © ISO 2010 – All rights reserved

p_0 is the sizing pressure of the equipment being protected, expressed in pascals;

Δp_{feed} is the pressure loss between the outlet of the control valve in the feed line and the pressurized system, expressed in pascals.

The pressure, p_{CV}, upstream of the control valve in the feed line can be either the maximum operating or the maximum permissible pressure in the upstream pressurized system. The pressure being used should have been defined in the specification of the sizing case according to 6.2. A more precise estimation of the flow rate required to be discharged can be obtained by following the guideline in IEC 60534-1.

Equations (16) to (20) are valid only for pure liquid flows through the control valve. If flashing is expected in the control valve, the method given in Reference [33] is recommended.

6.4.3 Pressure increase due to external heating

6.4.3.1 General

External heating resulting in two-phase flow includes heat input due to process heat transfer, fire exposure, or solar radiation, etc. Pressure can increase as a result of vaporization, desorption, or expansion of an enclosed liquid (e.g. liquefied gases).

The fire case is one of the main design cases for refinery industry installations and for the equipment for the storage/transport of liquefied gases on land or at sea. Details are included in American Petroleum Institute (API), Compressed Gas Association (CGA) and International Gas Carrier (IGC) codes. The key parameter for the safety valve sizing is the heat flux. Depending on the field of application, this heat flux is modified, which results in different safety valve sizes. In 6.4.3.2, the API recommended practice is used as an example.

6.4.3.2 Mass flow rate required to be discharged

The equations to calculate the mass flow rate required to be discharged are included in Table 2, based on different heat input mechanisms and fluid compositions, i.e. two-phase flow and single-phase gas/vapour or liquid flow.

The gas/vapour mass flow rate, $Q_{m,out}$, expressed in kilograms per second, required to be discharged from the pressurized system should be calculated as given in Equation (21) in the case of vapour/liquid two-phase flow and external heating:

$$Q_{m,out} = \frac{\dot{Q}}{\Delta h_{v,0}} \cdot \frac{1}{\dot{Q}_{in}^*} \tag{21}$$

where $\dot{Q}_{in}^*$ is calculated iteratively as given by Equation (22):

$$\frac{1}{\dot{Q}_{in}^*}\left(v^* - \dot{Q}_{in}^* - \dot{Q}_{acc}^*\right) - \ln\left(\frac{v^*}{\dot{Q}_{in}^*}\right) = 0 \tag{22}$$

where

$\Delta h_{v,0}$ is the latent heat of vaporization at the sizing condition, expressed in joules per kilogram;

$\dot{Q}_{in}^*$ is the ratio of total heat input to energy flow removed by evaporation;

$\dot{Q}_{acc}^*$ is the ratio of sensible heat to latent heat; see Table 2, Equation (48);

v^* is the dimensionless specific volume of the homogeneous two-phase mixture at the sizing conditions in the pressurized system; see Table 2, Equation (45), (46) or (47);

$\dot{Q}$ is the heat input into the pressurized system; see Equation (23) or Equation (24).

STANDARDSISO.COM : Click to view the full PDF of ISO 4126-10:2010

© ISO 2010 – All rights reserved

For cases where $\dot{Q}^*_{acc}$ is zero, i.e. cases where the sizing pressure, p_0, equals the pressure, p_{over}, that means $\Delta T_{over} = 0$, and Equation (22) reduces to $\dot{Q}^*_{in} = v^*$.

Depending on the type of heat transfer, $\dot{Q}$ is calculated as follows:

a) In the case of process heat transfer, $\dot{Q}$, the heat input into the pressurized system, expressed in watts, is calculated as given by Equation (23):

$$\dot{Q} = B_{heat} \cdot A_{heat} \cdot (T_{heat} - T_{sat}) \tag{23}$$

where

B_{heat} is the maximum overall heat transfer coefficient (without fouling in the equipment), expressed in watts per square metre - kelvin, for the sizing case considered;

A_{heat} is the area of heat exchange in the pressurized system in case of external heat input, expressed in square metres;

T_{heat} is the maximum possible temperature of the heat source, expressed in kelvins;

T_{sat} is the saturation temperature, calculated at p_{over} (the maximum pressure during the relief, expressed in pascals) instead of p_0 (the sizing pressure, expressed in pascals); credit is taken on Δp_A, see Figures 1 a) and 1 b).

b) In case of fire exposure, $\dot{Q}$, the heat input into the pressurized system, expressed in watts, is calculated by using Equation (24), see ISO 23251:2006, 5.15:

$$\dot{Q} = 43\,200 \cdot F \cdot A_{fire}^{0,82} \tag{24}$$

where

F is the environmental factor for heat input from fire; see Table 2;

A_{fire} is the total surface area wetted by internal liquid and located within 7,5 m vertically from grade or from any surface capable of sustaining a pool fire, expressed in square metres.

The factor 43 200 is based on experiments [14] and the assumption of prompt fire fighting and adequate drainage. Where these conditions do not exist, a factor of 70 900 should be used. The environmental factor, F, is listed in Table 2 for isolated and non-isolated pressurized systems. The surface area, A_{fire}, of a vertical cylindrical vessel wetted by internal liquid and heated externally by fire, including only the mantle and not the bottom of the vessel is raised to the power 0,82 to give credit to the fact that large equipment cannot be completely engulfed by a fire.

As described in 6.3.4.3, two-phase flow is less likely to occur in the case of external heating compared with the generation of homogeneously distributed bubbles. When guidelines like those of ISO 23251 or CGA S-1 [15] are applied for the fire case, the heat input, $\dot{Q}$, into the pressurized system is overestimated in most practical cases.

For equipment containing non-foamy, non-viscous fluids without suspended particles, the assumption of all vapour venting has been shown to be adequate even if initial two-phase venting is predicted [11]. For these cases, the ratio, $\dot{Q}_{in}{}^*$, of total heat input to the energy flow removed by evaporation is equal to v^*.

In case of a jet fire directed towards the vessel wall, a safety valve might not be an adequate safety device.

STANDARDSISO.COM : Click to view the full PDF of ISO 4126-10:2010

 © ISO 2010 – All rights reserved

6.4.4 Pressure increase due to thermal runaway reactions

6.4.4.1 General

For the calculation of the flow rate required to be discharged, the type of (homogeneous) liquid-phase reaction system generating the pressure shall be identified first. These are vapour pressure (tempered), gassy, and hybrid systems; see 3.5.

In a tempered system, the majority of heat released by the chemical reaction is discharged in the form of vapour originating from the evaporation of one or more of the components. The rate of temperature rise is reduced or even stopped in case of adequate relief design. In gassy systems, gas is produced by chemical reaction and the vapour pressure of the reaction components is negligibly small in comparison. In this case, the temperature and reaction rate continue increasing despite pressure relief because relatively small heat energy is released with the gas. The temperature continues to rise until the reaction is almost complete. For a hybrid system, the pressure is due to both evolution of a permanent gas and increasing vapour pressure with rising temperature.

The kinetics and rates of heat or gas release are seldom available at the conditions of emergency relief. Therefore, the determination of these usually requires laboratory experiments in dedicated equipment. Indeed, it is possible that the type of liquid-phase reaction system changes during the relieving process.

Depending on the type of liquid-phase reaction system, different equations apply to the calculation of the mass flow rate required to be discharged. Equations are given for two-phase gas/liquid mixtures and single-phase gas or liquid flow.

6.4.4.2 Tempered (vapour pressure) systems

The two-phase mass flow rate, $Q_{\mathrm{m,out}}$, expressed in kilograms per second, required to be discharged from the pressurized system can be calculated from Equation (25):

$$Q_{\mathrm{m,out}} = \frac{\dfrac{\dot{Q}}{\Delta h_{\mathrm{v,0}}}}{\left(\sqrt{v^*} + \sqrt{\dot{Q}^*_{\mathrm{acc}}}\right)^2} \tag{25}$$

where

$\dot{Q}$ is the heat input into the pressurized system, expressed in watts; see Equation (30);

$\Delta h_{\mathrm{v,0}}$ is the latent heat of vaporization at the sizing condition, expressed in joules per kilogram;

v^* is the dimensionless specific volume of the homogeneous two-phase mixture in the pressurized equipment at the sizing pressure; see Table 2, Equation (45), (46) or (47);

$\dot{Q}^*_{\mathrm{acc}}$ is the ratio of the sensible heat to the latent heat; see Table 2, Equation (48).

The specific volume, v_0, of the homogeneous two-phase mixture at the inlet flange of the safety valve is assumed to be equal to the specific volume of the homogeneous two-phase mixture at sizing conditions in the pressurized system.

The mean value of the specific volume of the homogeneous two-phase mixture at sizing conditions in the pressurized system is as given in Equation (26); see Table 2, Equation (44).

$$v_0 = \dot{x}_0 \cdot v_{\mathrm{g,0}} + (1 - \dot{x}_0) \cdot v_{\mathrm{l,0}} \tag{26}$$

STANDARDSISO.COM : Click to view the full PDF of ISO 4126-10:2010

© ISO 2010 – All rights reserved

The mass flow quality, $\dot{x}_0$, at sizing conditions, i.e. the gas mass flow rate related to the total mass flow rate of a two-phase mixture, is determined from Equation (27):

$$\dot{x}_0 = \frac{\varepsilon_0 \cdot v_{l,0}}{(1-\varepsilon_0)\cdot v_{g,0} + \varepsilon_0 \cdot v_{l,0}} \tag{27}$$

where

ε_0 is the void fraction in the pressurized system at sizing conditions; see Table 2, Equation (43);

$v_{l,0}$ is the specific liquid volume at sizing conditions in the pressurized system, expressed in cubic metres per kilogram;

$v_{g,0}$ is the specific gas volume at sizing conditions in the pressurized system, expressed in cubic metres per kilogram.

In Equation (25), (see also Table 2), $\dot{Q}^*_{acc}$ is the ratio of the sensible heat to the latent heat. It characterizes an allowable further temperature increase, ΔT_{over}, starting from the saturation temperature corresponding to the sizing pressure, $T_{sat}(p_0)$, to that corresponding to the maximum pressure during relief, p_{over}, as given in Equation (28):

$$\Delta T_{over} = T_{sat}\left(p_{over}\right) - T_{sat}\left(p_0\right) \tag{28}$$

where

ΔT_{over} is the temperature difference between the saturation temperature at the maximum pressure, p_{over}, during the relief and the saturation temperature at the sizing pressure, p_0, expressed in kelvins;

T_{sat} is the saturation temperature of the liquid, expressed in kelvins;

p_{over} is the maximum pressure during the relief, expressed in pascals;

p_0 is the sizing pressure, expressed in pascals.

Here, p_{over} should not exceed the maximum allowable accumulated pressure, p_{MAA}, of the pressurized system, so that Δp_{over}, the absolute overpressure, expressed in pascals, is as given by Equation (29):

$$\begin{aligned}\Delta p_{over} &= p_{over} - p_0 \\ &\leqslant p_{MAA} - p_0\end{aligned} \tag{29}$$

where

p_{over} is the maximum pressure during the relief, expressed in pascals;

p_0 is the sizing pressure, expressed in pascals;

p_{MAA} is the maximum allowable accumulated pressure of the pressurized system, expressed in pascals.

The absolute overpressure, Δp_{over}, is often chosen in the range of 10 % to 30 % of the opening pressure. If it is zero, then $\dot{Q}^*_{acc}$ is also zero. By allowing for a pressure difference, the necessary safety valve size is usually significantly reduced.

In case of reacting systems, the opening pressure should usually be less than the equipment maximum allowable working pressure. By keeping the opening pressure low, the discharge occurs at lower temperatures so that the reaction rate remains relatively low.

STANDARDSISO.COM : Click to view the full PDF of ISO 4126-10:2010

 © ISO 2010 – All rights reserved

The heat input, $\dot{Q}$, expressed in watts, from the chemical reaction into the pressurized system is obtained by averaging the adiabatic rate of temperature increase corresponding to p_0 and p_{over}, as given in Equation (30):

$$\dot{Q} = \frac{M_0 \cdot c_{pl,0}}{2} \left(\left. \frac{dT}{dt} \right|_0 + \left. \frac{dT}{dt} \right|_{over} \right) \tag{30}$$

where

M_0 is the total liquid mass in the pressurized system, expressed in kilograms;

$c_{pl,0}$ is the specific heat capacity of the liquid mixture at the sizing condition, expressed in joules per kilogram - kelvin;

$\left. \frac{dT}{dt} \right|_0$ is the rate of temperature increase in the pressurized system at the sizing conditions, expressed in kelvins per second;

$\left. \frac{dT}{dt} \right|_{over}$ is the rate of temperature increase in the pressurized system at the maximum pressure during relief, expressed in kelvins per second. If the maximum rate of temperature increase occurs between p_0 and p_{over}, this maximum reaction self-heat rate should be applied instead of the temperature increase at maximum pressure during relief.

Equation (30) is not applicable if the maximum rate of temperature increase occurs between p_0 and p_{over}. In this case, it is recommended to use the maximum reaction self-heat rate instead of that at p_{over}. It is important that the reaction self-heat rate correspond to that in an adiabatic reaction system.

6.4.4.3 Gassy and hybrid systems

The two-phase mass flow rate required to be discharged from the pressurized system, $Q_{m,out}$, expressed in kilograms per second, can be calculated from Equation (31):

$$Q_{m,out} = \Gamma_0 \, M_0 \, v_{g,0} / v_0 \tag{31}$$

where

Γ_0 is the gas production rate per unit mass of liquid, i.e. the gas mass flow rate per unit of liquid mass inventory in the pressurized system at the sizing conditions, expressed in (kilograms per second) per kilogram;

M_0 is the total liquid mass in the pressurized system, expressed in kilograms;

v_0 is the specific volume of a homogeneous two-phase mixture in the system at the sizing conditions, expressed in cubic metres per kilogram; see Table 2, Equation (44);

$v_{g,0}$ is the specific volume of the gas phase at the sizing conditions, expressed in cubic metres per kilogram; see Table 3, Equation (53).

In contrast to the sizing for tempered systems, a “mass-loss allowance” is not included for gassy and hybrid systems in order to keep the sizing procedure simple and yet conservative. A more accurate and realistic prediction is possible, if the loss of reactive mass from the vessel during the relief period is considered. This mass loss is considerably influenced by the swell-up behaviour in the vessel, which again influences the quality of the fluid at the inlet of the safety valve. It is not conservative to assume a homogeneous flow regime in the vessel, since the mass loss would be overestimated and, therefore, the pressure rise underestimated. Because the consideration of the mass loss is, therefore, strongly dependent on a realistic model of the flow regime, the method described here does not consider a mass loss during the relief period. Further information on this topic is given in References [26] and [27].

STANDARDSISO.COM : Click to view the full PDF of ISO 4126-10:2010

© ISO 2010 – All rights reserved

It is important that the maximum gas production rate correspond to that in an adiabatic runaway with equal starting pressure, concentrations, etc., postulated for the sizing case from step 1; see 6.2. Often, the gas production rate is developed from dedicated experiments [16]. The use of this gas production rate can, sometimes, lead to an oversizing if, during the relief process, the reactor is emptied before the maximum gas production rate occurs.

The relief of mixtures identified as hybrid systems may be conservatively treated by using the equations for gassy systems.

6.5 Step 4 — Calculation of the dischargeable mass flux through a safety valve

6.5.1 General

The basis for sizing the safety valve is the equation for the conservation of momentum or energy for isentropic flow through a frictionless (ideal) nozzle. Thus, the mass flux, $\dot{m}_{\text{ideal}}$, through a theoretically perfect (adiabatic, frictionless) nozzle, expressed in kilograms per square metre - second, is as given in Equation (32):

$$\dot{m}_{\text{ideal}} = \frac{1}{v_{\text{seat}}}\left(-2\int_{p_0}^{p_{\text{seat}}} v\,\mathrm{d}p\right)^{1/2} \tag{32}$$

where

v_{seat} is the specific volume in the narrowest flow cross-section between the pressurized system and the valve seat, expressed in cubic metres per kilogram;

p_{seat} is the pressure in the narrowest flow cross-section (usually the valve seat), expressed in pascals;

p_0 is the pressure at the sizing condition, expressed in pascals;

v is the specific volume in the nozzle between the inlet and the narrowest flow cross-section, expressed in cubic metres per kilogram;

p is the pressure in the nozzle, expressed in pascals.

In order to evaluate this integral, it is necessary to know the specific volume of the two-phase mixture, v, as a function of pressure along an isentropic path from the stagnation pressure, p_0, to the pressure, p_{seat}, in the narrowest flow cross-section (usually in the valve seat). A number of models have been proposed in the literature for approximating this $v(p)$ relationship. In general, they are based on the assumption of a homogeneous equilibrium flow and empirical corrections are made for the thermodynamic and mechanical non-equilibrium; see Reference [25].

In industry, thermodynamic property data can be available from a database or else measured. These data are measured for each phase separately under equilibrium conditions. Then, typically, two-phase specific volume data are modelled by a linear summation of the single-phase specific volumes weighted by the quality. If homogeneous equilibrium flow is assumed, the integral can be evaluated numerically, i.e. neglecting boiling delay and slip.

Equilibrium models might not be fully appropriate for the flow through short nozzles and low-quality fluid flow. That is the reason why the thermodynamic non-equilibrium is included empirically; see References [18], [24], [26] and [27]. Typically, the non-equilibrium effect is more pronounced than the change of property data between inlet and nozzle throat [34].

In the case that a linear relation for $v(p)$ is assumed, fluid thermo-physical property data at only one pressure point, e.g. p_0, are required, and this allows for evaluating the integral analytically, e.g. the Omega method of Leung [21]. Diener and Schmidt [18] modified this method to account for non-equilibrium effects and formed the

STANDARDSISO.COM : Click to view the full PDF of ISO 4126-10:2010

 © ISO 2010 – All rights reserved

basis for the method presented in 6.5. The applicability limits of the method according to Leung [21] are given along with Equations (1) and (2). The accuracy of the specific volume estimation depends on the actual properties of the fluid under consideration and on the pressure range in the safety valve nozzle. The modified Omega method is presented in 6.5 because it requires fluid property data at only one condition and accounts for non-equilibrium effects, i.e. it leads to a reduced overestimation of the valve size.

The compressibility coefficient ω at the sizing conditions is given in Equation (33):

$$\omega = \frac{\left(\frac{v_{\text{seat}}}{v_0} - 1\right)}{\left(\frac{p_0}{p_{\text{seat}}} - 1\right)} \tag{33}$$

with $0 \leqslant \omega \leqslant 100$ (34)

where

v_{seat} is the specific volume of the two-phase gas/liquid mixture in the narrowest flow cross-section of the safety valve (in the valve seat or just downstream of it, depending on the valve lift), expressed in cubic metres per kilogram;

v_0 is the specific volume in the pressurized system at the sizing conditions, expressed in cubic metres per kilogram;

p_0 is the pressure in the system at the sizing conditions, expressed in pascals;

p_{seat} is the pressure in the seat cross-section of the safety valve, expressed in pascals.

If a critical pressure ratio has been established in the valve, the pressure, p_{seat}, in the narrowest cross-section is equal to the critical pressure, p_{crit}. Otherwise, it equals the back pressure, p_{b}.

The above definition of ω involves property data at two pressures and is more accurate than evaluating it at one pressure. It is also valid for single- or multi-component systems close to the limitations of reduced pressure and temperature. This definition has the disadvantage that it is necessary to know the property data in the valve-seat cross-section of the safety valve, which depend on the degree of thermodynamic non-equilibrium (boiling delay, slip of gas phase) in the valve. Generally, these data are not available. For simplification, the compressibility coefficient, ω, can be based on Equation (33) with p_{seat} set to 80 % or 90 % of p_0 or on the sizing conditions in the pressurized system (see 6.5.4) – i.e. typically the critical pressure ratio for two-phase flow – and assuming thermodynamic equilibrium conditions to calculate v_{seat} at p_{crit}. A comparison of the accuracy of the methods is given in References [34] and [26].

The calculation of the dischargeable mass flux, $\dot{m}_{\text{SV}}$, expressed in kilograms per (square metre - second) through the safety valve is given by Equation (35), which can also be seen in Table 3.

$$\begin{aligned} \dot{m}_{\text{SV}} &= K_{\text{dr}} \cdot \dot{m}_{\text{ideal}} \\ &= K_{\text{dr}} \cdot C \cdot \sqrt{\frac{2p_0}{v_0}} \end{aligned} \tag{35}$$

where

K_{dr} is the valve discharge coefficient; see Table 3;

$\dot{m}_{\text{ideal}}$ is the mass flux through a theoretically perfect (adiabatic, frictionless) nozzle, expressed in kilograms per (square metre - second);

C is the flow coefficient; see Table 3, Equation (58), (59) or (57);

STANDARDSISO.COM : Click to view the full PDF of ISO 4126-10:2010

© ISO 2010 – All rights reserved

p_0 is the sizing pressure, expressed in pascals;

v_0 is the specific volume of the homogeneous two-phase mixture at sizing conditions in the pressurized system, expressed in cubic metres per kilogram; see Table 3, Equation (44).

The calculation is performed in two steps. First, the ideal mass flux, $\dot{m}_{\text{ideal}}$, is calculated through a theoretically perfect (adiabatic frictionless) nozzle. It is composed of the flow coefficient, C (see 6.5.3), which is a function of the sizing pressure, p_0, and the specific volume of the homogeneous two-phase mixture at the sizing conditions in the pressurized system. Second, the ideal mass flux, $\dot{m}_{\text{ideal}}$, is then reduced by using a discharge coefficient, K_{dr}, related directly to this model.

The mass flux through the safety valve is related to the narrowest cross-section, A_0, usually the valve seat area.

In Table 3, equations are given for liquid, for two-phase mixture and for single-phase gas/vapour flow.

6.5.2 Two-phase flow valve discharge coefficient, $K_{\text{dr,2ph}}$

The discharge coefficient is strongly dependent on the ideal mass flux model and the flow behaviour inside the safety valve. It should be determined experimentally. Valve manufacturers generally provide only values for single-phase low-viscosity liquid flow, $K_{\text{dr,l}}$, and single-phase critical gas flow, $K_{\text{dr,g}}$. If the discharge coefficient, $K_{\text{dr,2ph}}$, for two-phase flow is not experimentally available, it should be determined for the given method as the weighted average of the certified discharge coefficients for single-phase flow as given in Equation (36):

$$K_{\text{dr,2ph}} = \varepsilon_{\text{seat}} \cdot K_{\text{dr,g}} + \left(1 - \varepsilon_{\text{seat}}\right) \cdot K_{\text{dr,l}} \tag{36}$$

where

$\varepsilon_{\text{seat}}$ is the void fraction in the narrowest cross-section of the valve at the sizing conditions for a homogeneous two-phase mixture, as given by Equation (37):

$$\varepsilon_{\text{seat}} = 1 - \frac{v_{\text{l},0}}{v_0 \cdot \left[\omega \cdot \left(\frac{1}{\eta} - 1\right) + 1\right]} \tag{37}$$

$K_{\text{dr,g}}$ is the certified valve discharge coefficient for single-phase vapour/gas flow;

$K_{\text{dr,l}}$ is the certified valve discharge coefficient for single-phase liquid flow;

η is the pressure ratio, either the critical pressure ratio η_{crit} (if $\eta_{\text{b}} < \eta_{\text{crit}}$) or the back pressure ratio η_{b} (if $\eta_{\text{b}} \geqslant \eta_{\text{crit}}$);

$v_{\text{l},0}$ is the specific volume of the liquid phase at the sizing conditions, expressed in cubic metres per kilogram;

v_0 is the specific volume of a homogeneous two-phase mixture in the system at the sizing conditions, expressed in cubic metres per kilogram;

ω is the compressibility coefficient.

This recommendation is based on the assumption that the value of the discharge coefficient for two-phase flow is in between those values for single-phase liquid and vapour flow. The result of this averaging procedure is in substantial agreement with the method presented in Reference [24]. More adequate results can be obtained by experiments for a specific safety valve type.

The use of this discharge coefficient is indispensably coupled with the homogeneous, partially non-equilibrium flow model used for calculation of C as given in 6.5.3.

STANDARDSISO.COM : Click to view the full PDF of ISO 4126-10:2010

 © ISO 2010 – All rights reserved

The proposed method is equivalent to the method of API RP 520 [13] for preliminary sizing of safety valves if the following coefficients are used:

— K_{dr} = 0,85 for two-phase discharge;

— K_{dr} = 0,65 for saturated liquid discharge;

— N = 1 used in 6.5.4, Equation (40).

6.5.3 Flow coefficient, C

The flow coefficient, C, is calculated by using Equation (58), (59) or (57) in Table 3. It is a function of the compressibility coefficient, ω [see Equation (40)]. This flow coefficient also accounts for the presence of critical flow in the valve.

6.5.4 Compressibility coefficient, ω

The compressibility coefficient, ω, is given as a function of the fluid state upstream of the valve (e.g. subcooled liquid, two-phase mixture or gas/vapour) and shall be calculated at the sizing conditions, as described for the two cases, a) and b), as follows.

a) Case 1: For systems with flashing liquids the compressibility coefficient is calculated as follows; see Reference [18].

In the case of saturated liquids [$\dot{x}_0 \geqslant 0, T_0 = T_{sat}(p_0)$], follow the calculations in steps 1 to 3 as follows. In the case of subcooled liquids [$\dot{x}_0 = 0, T_0 < T_{sat}(p_0)$], the equations given in Table 3 may be used, but are very conservative. A more accurate method is given in Reference [31].

1) Step 1: Calculate the critical pressure ratio, η_{crit}, in a homogeneous equilibrium flow by using Equation (38) or (39), on the basis of the compressibility coefficient, ω, with N = 1 in Equation (40):

$$0 = \eta_{crit}^2 + \left(\omega^2 - 2\omega\right)\cdot\left(1-\eta_{crit}\right)^2 + 2\cdot\omega^2\cdot\ln\left(\eta_{crit}\right) + 2\,\omega^2\left(1-\eta_{crit}\right) \tag{38}$$

where η_{crit} is the critical pressure ratio, i.e. the ratio of the pressure in the narrowest flow cross-section at critical flow conditions and the sizing pressure.

For $\omega \geqslant 2$, the iterative solution for η_{crit} can be avoided by applying the approximation given in Equation (39):

$$\eta_{crit} = 0{,}55 + 0{,}217\cdot\ln(\omega) - 0{,}046\cdot\left[\ln(\omega)\right]^2 + 0{,}004\cdot\left[\ln(\omega)\right]^3 \tag{39}$$

The compressibility coefficient, ω, for homogeneous equilibrium two-phase flow is given in Equation (40):

$$\omega = \frac{\dot{x}_0\cdot v_{g,0}}{\kappa_0\cdot v_0} + \frac{c_{pl,0}\cdot p_0\cdot T_0}{v_0}\cdot\left(\frac{v_{g,0}-v_{l,0}}{\Delta h_{v,0}}\right)^2\cdot N \tag{40}$$

where

N is the boiling delay factor, equal to 1 for a homogeneous equilibrium two-phase flow;

$\dot{x}_0$ is the mass flow quality, i.e. the ratio of the gas mass flow rate to the total mass flow rate of a two-phase mixture at the sizing conditions; see Equation (27);

STANDARDSISO.COM : Click to view the full PDF of ISO 4126-10:2010

p_0 is the sizing pressure, expressed in pascals;

$v_{g,0}$ is the specific gas volume at the sizing conditions in the pressurized system, expressed in cubic metres per kilogram;

$v_{l,0}$ is the specific liquid volume at the sizing conditions in the pressurized system, expressed in cubic metres per kilogram;

$\Delta h_{v,0}$ is the latent heat of vaporization at the sizing condition, expressed in joules per kilogram;

$c_{pl,0}$ is the specific heat capacity of the liquid mixture at the sizing condition, expressed in joules per kilogram - kelvin;

T_0 is the temperature corresponding to the sizing pressure, expressed in kelvins;

v_0 is the specific volume of a homogeneous two-phase mixture in the system at the sizing conditions, expressed in cubic metres per kilogram;

η_{crit} is the ratio of critical pressure in the narrowest flow cross-section and the sizing pressure;

κ_0 is the isentropic coefficient at the sizing conditions.

2) Step 2: Calculate the boiling delay factor, N, for a homogeneous, non-equilibrium flow, which, in the case of low-viscosity liquids ($\Omega_{l,0} < 0{,}1$ Pa·s), is as given in Equation (41):

$$N = \left[\dot{x}_0 + c_{pl,0} \cdot p_0 \cdot T_0 \cdot \frac{\left(v_{g,0} - v_{l,0}\right)}{\Delta h_{v,0}{}^2} \cdot \ln\left(\frac{1}{\eta_{crit}}\right) \right]^a \tag{41}$$

where a is the correlation parameter for boiling delay, equal to 2/5 for safety valves, see Reference [18] for details.

The boiling delay factor, N, is introduced in order to predict the two-phase mass flux more adequately, especially in the case of a saturated liquid or a low quality inlet condition. This method is equivalent to API RP 520[13] if a default value of $N = 1$ is used together with a K_{dr} in accordance with Reference [13]; see 6.5.2.

Figure 5 shows an example of the difference between a compressibility coefficient calculated with $N = 1$ for homogeneous equilibrium flow (i.e. according to the original definition of ω) and calculated according to Equation (41) for homogeneous non-equilibrium flow.

In the case of high-viscosity liquids ($\Omega_{l,0} \geqslant 0{,}1$ Pa·s), homogeneous, equilibrium two-phase flow should be assumed, for which $N = 1$.

3) Step 3: Calculate the compressibility coefficient, ω, for a homogeneous, non-equilibrium flow by means of Equation (40) and either $N = 1$ or the result of Equation (41) for $N < 1$.

STANDARDSISO.COM : Click to view the full PDF of ISO 4126-10:2010

© ISO 2010 – All rights reserved

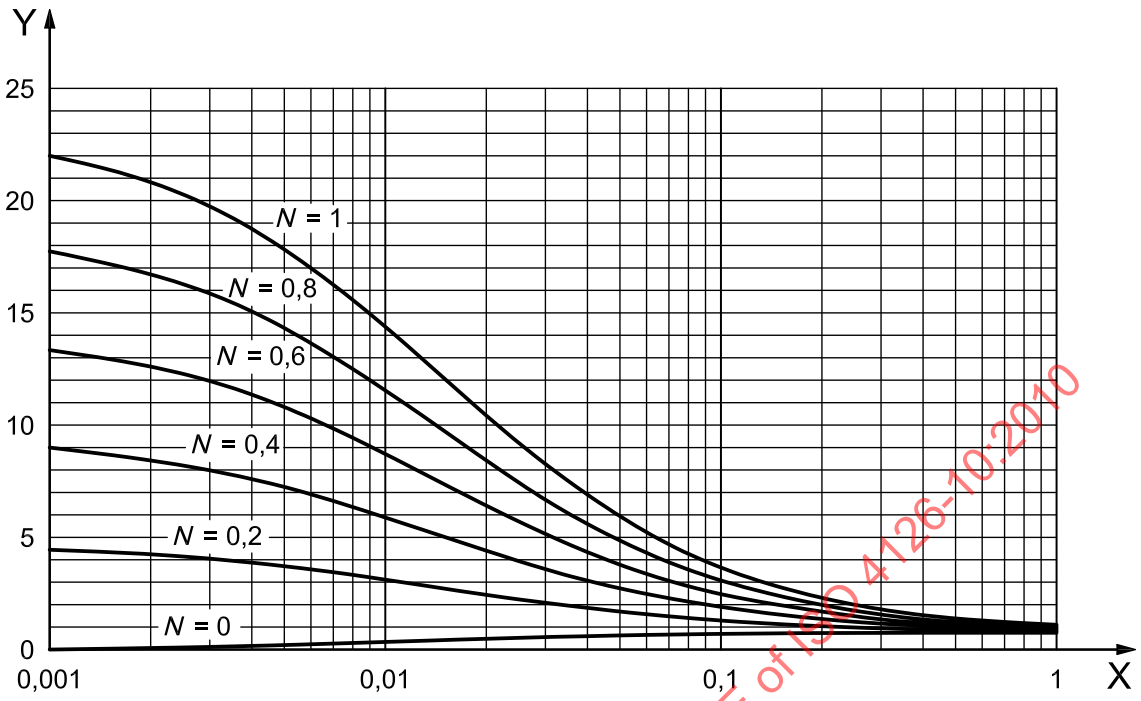

Key

X mass flow quality, $\dot{x}_0$

Y compressibility coefficient, ω

Figure 5 — Compressibility coefficient as a function of mass flow quality for a mixture of styrene and ethyl benzene during polymerization

b) Case 2: For non-flashing, two-phase systems, the compressibility coefficient, ω, is as given in Equation (42):

$$\omega = \frac{1}{\kappa_0} \cdot \frac{\dot{x}_0 \cdot v_{g,0}}{v_0} \cong \varepsilon_0 \tag{42}$$

where

$\dot{x}_0$ is the mass flow quality, i.e. the ratio of the gas mass flow rate to the total mass flow rate of a two-phase mixture at the sizing conditions; see Equation (27);

κ_0 is the isentropic coefficient for gas/vapour at the sizing conditions;

ε_0 is the void fraction in the pressurized system at the sizing conditions for a homogeneous, two-phase mixture; see Table 2, Equation (43);

$v_{g,0}$ is the specific volume of the gas phase at the sizing conditions, expressed in cubic metres per kilogram;

v_0 is the specific volume of a homogeneous, two-phase mixture in the system at the sizing conditions, expressed in cubic metres per kilogram.

6.5.5 Critical pressure ratio, η_{crit}

In the cases of single-phase gas and two-phase flow, it should be checked whether a critical (choked) flow is established in the valve seat area. This occurs when the ratio of the back pressure in the exit flange of the safety valve to the sizing pressure, $\eta_b = p_b/p_0$, is less than the critical pressure ratio, $\eta_{crit} = p_{crit}/p_0$.

When $\eta_b \leqslant \eta_{crit}$, choked flow occurs.

STANDARDSISO.COM : Click to view the full PDF of ISO 4126-10:2010

© ISO 2010 – All rights reserved

The mass flux reaches its critical (maximum) value when the flow is choked. The pressure ratio, η, in Table 3 [Equation (58), (59) or (57)] is then set to η_{crit} for the calculation of the flow coefficient because the pressure in the narrowest flow cross-sectional area cannot decrease below this critical pressure.

For subcritical flow, the mass flux depends on the back pressure and is determined by calculating the flow coefficient using $\eta = \eta_b$.

In Figure 6, the critical pressure ratio, p_{crit}/p_0, is given as a function of the compressibility coefficient, ω, for non-flashing and flashing two-phase mixtures.

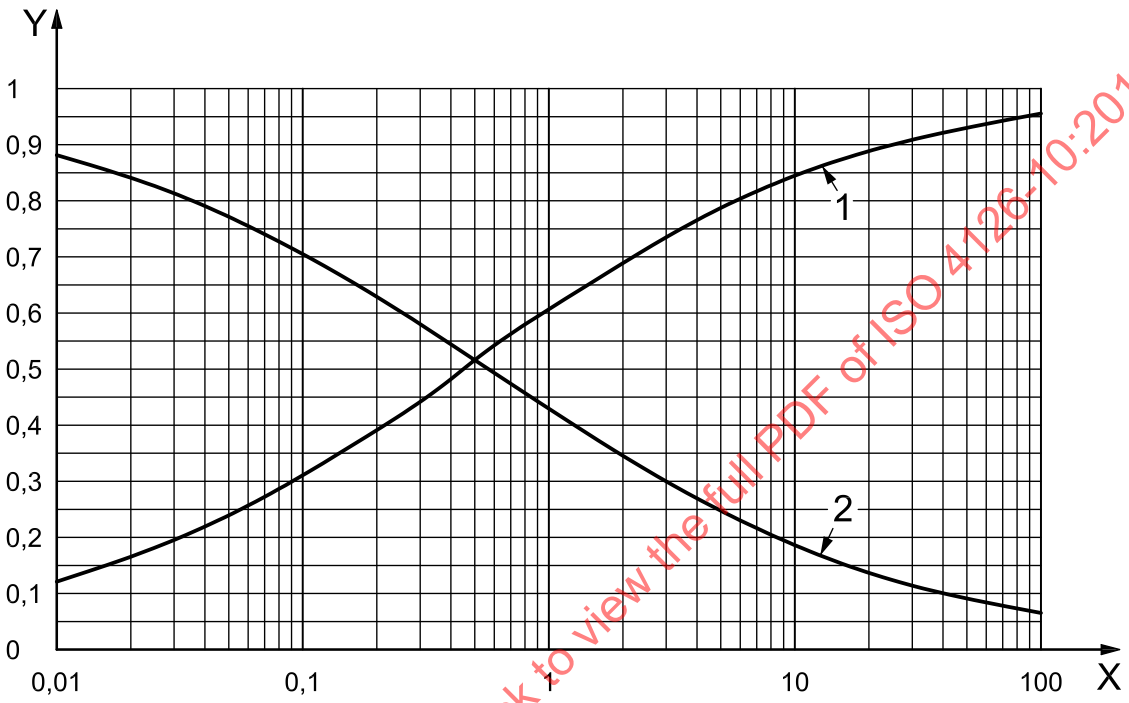

Key

X compressibility coefficient, ω

Y dimensionless critical pressure ratio, η_{crit} (line 1), and flow coefficient, C (line 2)

Figure 6 — Critical pressure ratio and flow coefficient for choked flow of a gas/liquid mixture through a safety valve

6.6 Step 5 — Proper operation of safety valves connected to inlet and outlet lines

The piping and fittings from the protected equipment to the safety valve and from the safety valve to the ultimate fluid discharge location can have a significant effect on the performance of the safety valve. Proper design of these piping segments is essential to the proper pressure protection of the plant equipment.

In the case of single-phase flow (liquid, gas or vapour), ISO 4126-9 provides guidance on the design and installation of these piping systems connected to safety valves. It should be noted that the methods and limitations provided in ISO 4126-9 have been developed for and applied to safety valves in single-phase (liquid or vapour) service. The guidance provided in ISO 4126-9 (limitation of inlet pressure loss and back pressure to certain values) is generally specified by national codes or regulations but is based on experience with single-phase fluids.

In the case of two-phase flow, the limiting values developed for single-phase flow (3 % inlet pressure loss and 10 % back pressure) are not necessarily applicable. Experimental work is required on this subject.

To avoid unstable operation of safety valves with two-phase flow, it is recommended to use friction damper and balanced bellows.

STANDARDSISO.COM : Click to view the full PDF of ISO 4126-10:2010

 © ISO 2010 – All rights reserved

Table 2 — Equations used to calculate the mass flow rate required to be discharged

	Known parameters	Flow type at valve inlet			Equations for $\dot{Q}$
		Two-phase gas/liquid mixtures	Gas/vapour	Liquid (bottom venting)	
Inlet void fraction	ϕ_0	$\varepsilon_0 = 1 - \phi_0 = 1 - \frac{v_{l,0}}{v}$ (43)	$\varepsilon_0 = 1$	$\varepsilon_0 = 0$	
Inlet mass flow quality	$v_{g,0}$ $v_{l,0}$	$\dot{x}_0 = \frac{\varepsilon_0 \cdot v_{l,0}}{(1-\varepsilon_0)\cdot v_{g,0} + \varepsilon_0 \cdot v_{l,0}}$ (27)	$\dot{x}_0 = 1$	$\dot{x}_0 = 0$	
Inlet specific volume		$v_0 = \dot{x}_0 \cdot v_{g,0} + (1-\dot{x}_0)\cdot v_{l,0}$ (44) $v^* = \frac{v_0}{v_{g,0} - v_{l,0}}$ (45)	$v_0 = v_{g,0}$ $v^* = \frac{v_{g,0}}{v_{g,0} - v_{l,0}}$ (46)	$v_0 = v_{l,0}$ $v^* = \frac{v_{l,0}}{v_{g,0} - v_{l,0}}$ (47)	
Dimensionless accumulated heat	ΔT_{over} $c_{pl,0}$ $\Delta h_{v,0}$	$\dot{Q}^*_{acc} = \frac{c_{pl,0} \cdot \Delta T_{over}}{\Delta h_{v,0}}$ (48) $\Delta T_{over} = T_{sat}(p_{over}) - T_{sat}(p_0)$ (28)			
Tempered runaway reaction	M_0 $c_{pl,0}$ $\Delta h_{v,0}$ $\left.\frac{dT}{dt}\right\|_0$ $\left.\frac{dT}{dt}\right\|_{over}$	$Q_{m,out} = \frac{\frac{\dot{Q}}{\Delta h_{v,0}}}{\left(\sqrt{v^*} + \sqrt{\dot{Q}^*_{acc}}\right)^2}$ (25)	$Q_{m,out} = \frac{\dot{Q}}{\Delta h_{v,0}} \cdot \frac{1}{\dot{Q}^*_{in}}$ (8) where $\dot{Q}^*_{in}$ is calculated iteratively from Equation (9): $0 = \dot{Q}^*_{acc} - \dot{Q}^*_{in} + v^* \left[1 - \ln\left(\frac{v^*}{\dot{Q}^*_{in}}\right)\right]$ (9)		$\dot{Q} = \frac{M_0 \cdot c_{pl,0}}{2}\left(\left.\frac{dT}{dt}\right\|_0 + \left.\frac{dT}{dt}\right\|_{over}\right)$ (30)
Gassy runaway reaction	M_0 v_0 $v_{g,0}$	$Q_{m,out} = \Gamma_0 \, M_0 \, v_{g,0} / v_0$ (31) where Γ_0 is the experimentally determined gas production rate.		—	—

STANDARDSISO.COM : Click to view the full PDF of ISO 4126-10:2010

© ISO 2010 – All rights reserved