INTERNATIONAL STANDARD

ISO 26203-2

First edition
2011-10-15

Corrected version
2012-03-15

Metallic materials — Tensile testing at high strain rates —

Part 2: Servo-hydraulic and other test systems

Matériaux métalliques — Essai de traction à vitesses de déformation élevées — Partie 2: Systèmes d'essai servo-hydrauliques et autres systèmes d'essai

Reference number
ISO 26203-2:2011(E)

ISO copyright office
Case postale 56 • CH-1211 Geneva 20
Tel. + 41 22 749 01 11
Fax + 41 22 749 09 47
E-mail copyright@iso.org
Web www.iso.org

Published in Switzerland

Contents

Page

Foreword

ISO (the International Organization for Standardization) is a worldwide federation of national standards bodies (ISO member bodies). The work of preparing International Standards is normally carried out through ISO technical committees. Each member body interested in a subject for which a technical committee has been established has the right to be represented on that committee. International organizations, governmental and non-governmental, in liaison with ISO, also take part in the work. ISO collaborates closely with the International Electrotechnical Commission (IEC) on all matters of electrotechnical standardization.

International Standards are drafted in accordance with the rules given in the ISO/IEC Directives, Part 2.

The main task of technical committees is to prepare International Standards. Draft International Standards adopted by the technical committees are circulated to the member bodies for voting. Publication as an International Standard requires approval by at least 75 % of the member bodies casting a vote.

Attention is drawn to the possibility that some of the elements of this document may be the subject of patent rights. ISO shall not be held responsible for identifying any or all such patent rights.

ISO 26203-2 was prepared by Technical Committee ISO/TC 164, *Mechanical testing of metals*, Subcommittee SC 1, *Uniaxial testing*.

ISO 26203 consists of the following parts, under the general title *Metallic materials — Tensile testing at high strain rates*:

— *Part 1: Elastic-bar-type systems*

— *Part 2: Servo-hydraulic and other test systems*

This corrected version of ISO 26203-2:2011 incorporates the following correction:

— Figure A.2 a) The figure missing above Example 1 has been added.

Introduction

The deformation behaviour of many technical materials shows a positive strain-rate effect up to ductile failure, i.e. with increasing strain rate, an increase of yield stress and strain to failure can be observed. This information is of great importance for the reliable assessment of crashworthiness of automobile structures, which is increasingly determined by numerical methods to minimize the need for cost-intensive and time-consuming crash tests. For the numerical simulation of crash-type loads, stress-strain curves determined at higher strain rates are required. The quasi-static values determined according to ISO 6892-1, i.e. strain rates lower than or equal to 0,008 s^{-1}, are not suitable for the description of the behaviour of the material of a component under dynamic load, i.e. at strain rates higher than those in quasi-static tests.

Metallic materials — Tensile testing at high strain rates —

Part 2:
Servo-hydraulic and other test systems

1 Scope

This part of ISO 26203 gives requirements for the testing of metallic materials. Only examples for testing flat geometries are given; however, other geometries can be tested. The area of application spans a range of strain rates from 10^{-2} s^{-1} to 10^{3} s^{-1}. Tests are carried out between 10 °C and 35 °C and, unless otherwise specified, using a servo-hydraulic-type test system.

NOTE 1 Measurements at strain rates lower than 10^{-2} s^{-1} can be performed using machines designed for quasi-static testing.

NOTE 2 For test piece geometries other than those shown in 7.1 and Annex B, see ESIS P7 (Reference [1]) and FAT Guideline (Reference [2]).

2 Normative references

The following referenced documents are indispensable for the application of this document. For dated references, only the edition cited applies. For undated references, the latest edition of the referenced document (including any amendments) applies.

ISO 6892-1, *Metallic materials — Tensile testing — Part 1: Method of test at room temperature*

3 Terms and definitions

For the purposes of this document, the terms and definitions given in ISO 6892-1 apply.

4 Symbols

For the purposes of this document, the symbols given in ISO 6892-1 apply. Additional symbols, units and descriptions are provided in Table 1.

Table 1 — Symbols

Symbol	Unit	Description
		Test piece
a_o	mm	Original thickness of a flat test piece
b_o	mm	Original width of the parallel length of a flat test piece
b_k	mm	Width(s) of the clamping area of the test piece
L_o	mm	Original gauge length
L_c	mm	Parallel length
L_e	mm	Extensometer gauge length
r	mm	Transition radius
S_o	mm^2	Original cross-sectional area of the parallel length
S_D	mm^2	Dynamometer area: area on the fixed side of the test piece where only elastic deformations are required during the test

Table 1 *(continued)*

Symbol	Unit	Description
		Time
t	s	Time
t_f	s	Duration from beginning of test to moment of fracture initiation
		Elongation
A	%	Percentage elongation after fracture NOTE For non-proportional test pieces, the symbol A is supplemented by a subscript, which shows the original gauge length, in millimetres, e.g. $A_{20\ mm}$ = percentage elongation after fracture with an original gauge length L_o = 20 mm.
		Extension
A_g	%	Percentage plastic extension at maximum force, F_m (plastic strain at maximum force, F_m)
A_{gt}	%	Percentage total extension at maximum force, F_m (total strain at maximum force, F_m)
		Strain
$e(t)$	%	Time-dependent engineering strain
e_{pl}	%	Plastic engineering strain
e_t	%	Total engineering strain
ε_{pl}		True plastic strain
ε_t		True total strain
		Rates
v_o	mm s^{-1}	Initial displacement rate
$\dot{e}_{nom}$	s^{-1}	Nominal engineering strain rate = v_o / L_c [Equation (1)]
$\dot{e}_{mean}$	s^{-1}	Mean engineering strain rate = A/t_f [Equation (4)]
$\dot{e}(t)$	s^{-1}	Time-dependent engineering strain rate = $de(t)/dt$
$\dot{e}_{pl}$	s^{-1}	Mean value of the time-dependent engineering strain rate: $de(t)/dt$ in the range between start of yield or 1 % strain and strain at maximum force [Equation (5)]
f_u	Hz	Upper frequency limit of the relevant measuring system (force or extension)
		Force
F_m	N	Maximum force
		Engineering stress — True stress
R	MPa[a]	Engineering stress
σ	MPa	True stress
		Yield strength — Proof strength — Tensile strength
R_{eL}	MPa	Lower yield strength
R_p	MPa	Proof strength, plastic extension
R_m	MPa	Tensile strength
		Modulus of elasticity — Slope of stress-strain curve
E	MPa	Modulus of elasticity
m_E	MPa	Slope of the elastic part of the stress-strain curve[b]

[a] 1 MPa = 1 N/mm^2.

[b] In the elastic part of the stress-strain curve the value of the slope can closely agree with the value of the modulus of elasticity if optimal conditions (high resolution, double-sided averaging extensometers, proper alignment of the test piece, etc.) are used.

5 Principle

The stress-strain characteristics of metallic materials at specific plastic strain rates are determined.

To perform tension tests at strain rates above those described in ISO 6892-1, the measurement of force and elongation of the original gauge length, L_o, shall meet additional requirements in order to obtain reliable high-rate stress-strain curves. This part of ISO 26203 describes the requirements for determining and evaluating the stress and strain in force equilibrium during plastic deformation at strain rates up to 10^3 s^{-1}.

6 Apparatus

Testing machines in conformity with this part of ISO 26203 work on the principle that the kinetic energy required for the test is applied on the impact (or loading) side of the test piece (see Figure A.1). The load cell is located at the opposite end of the test piece, which is fixed or restrained in a clamp/grip (see Figure A.1). Loading at high strain rates is preferably impact-like and, therefore, often does not allow a fixed coupling of the test piece to the testing machine. All testing machines that permit a constant strain rate (within certain bounds; see 9.3) during the entire test are suitable for testing.

The most common high-rate testing machine applicable to this part of ISO 26203 utilizes a servo-hydraulic drive fitted with a slack adapter (see Reference [3]). Other systems, which may include, for example, flywheel impactors and drop towers, may be used on condition that the requirements given in this part of ISO 26203 are met.

An axial-symmetric parallel alignment of the test pieces in the load train shall be verified in order to prevent bending moments. The alignment of the load train elements may be performed in accordance with ASTM E1012 (see Reference [4]).

From a mechanical point of view, the load train should be compact and easy to manage. This enables the load train to attain short acceleration times while also maintaining the natural frequency of the clamping and load cell system at as high a level as possible.

7 Test pieces

7.1 Test piece geometry

Flat tensile test pieces are used for the dynamic testing of sheet materials. The strain rate developed in the test piece gauge length is dependent on both the applied displacement rate and the parallel length of the reduced section in the test piece. A test piece with a shorter parallel length enables higher strain rates. However, a parallel length, L_c, shall be maintained so that the original gauge length, L_o, is in a state of uniaxial stress (see Figure 1). Therefore, the recommended sizes of the parallel length, L_c, the width, b_o, the thickness, a_o, and the transition radius, r, for the test piece are as follows:

— $L_o / b_o \geq 2$

— $L_c \geq L_o + b_o / 2$

— $b_o / a_o \geq 2$

— b_o / b_k ″ 0,5

— $r \geq 10$ mm

Here b_k is the width of the clamping area.

Frequently used test piece dimensions based on ISO 6892-1 are given as examples in Annex B. Other geometries of test pieces (e.g. ISO 26203-1, ESIS P7 and FAT guideline) may be applied if agreed upon between the interested parties.

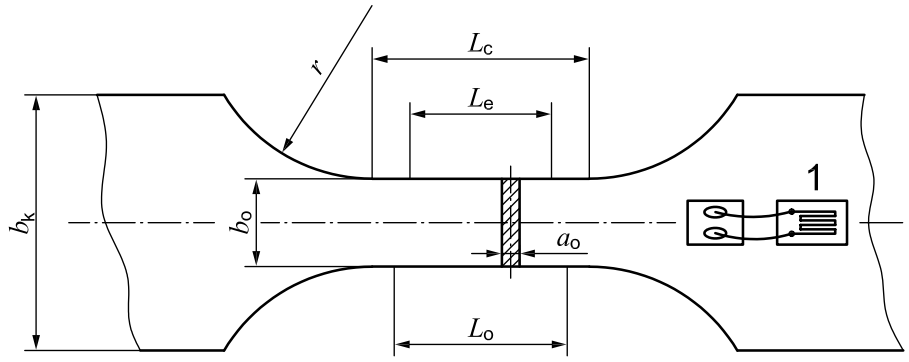

Key

1 strain gauge
a_o original thickness
b_o original width of the parallel length
b_k width of the clamping area
L_c parallel length
L_e extensometer gauge length
L_o original gauge length
r transition radius

Figure 1 — Characteristic test piece dimensions

NOTE In order to reach force equilibrium at low strain (beginning of the test) for high strain rates up to 10^3 s^{-1}, it is important to choose an appropriate length for the test piece.

The ends of the test pieces are designed to fit the available machine clamping devices. The dimensions of the ends of the test pieces shall be designed such that only elastic deformation takes place within the sample ends during the test.

Force measurement using strain gauges attached to the test piece (see Figure 1) requires a dynamometer zone (see References [1] and [5]). The dynamometer zone is located at the fixed or restrained end of the test piece. No plastic deformation is permissible in the dynamometer zone.

The test piece design should be validated prior to high-strain-rate testing. Validation can typically involve conducting quasi-static tests on high rate test pieces within the strain rate limit permitted in ISO 6892-1. The material properties derived from these tests should be compared with the data derived using the test piece design, test procedure and test machine in accordance with ISO 6892-1.

7.2 Preparation of test pieces

The instructions and comments for the manufacture of flat tensile test pieces in ISO 6892-1:2009, Annex B, shall be followed. In addition, special care should be taken to prevent strain hardening at the cut edges. Spark erosion, water jet cutting, high-speed machining or other processes which mitigate the development of strain-hardened edges, surface roughness and test piece distortion are recommended. The surfaces of the sheet samples should remain in the original, as-received condition. The surface roughness of the cut edges shall be minimized.

8 Procedure and measurements

8.1 Velocity selection

The velocity of the actuator is selected prior to a high-strain-rate test to achieve the desired strain rate in the parallel length of the test piece. An initial displacement rate of v_o permits the estimation of the achievable nominal engineering strain rate using Equation (1):

$$\dot{e}_{nom} = v_o / L_c \tag{1}$$

where L_c is the parallel length of the test piece.

The strain rate recorded during a test deviates from the estimated value (see 9.3) due to the compliance in the loading train.

NOTE For drop towers, the speed is determined by a calculation based on the drop height.

The material behaviour is governed by the strain rate in the parallel length of the test piece during the test. Therefore, the purpose of the test procedure is to conduct a test with a constant strain rate in the parallel length of the test piece (see 9.3) and not necessarily a constant velocity of the actuator.

8.2 Force measurement

The natural frequency of piezo-electric load cells is typically high enough for an accurate force measurement at lower strain rates. For strain rates greater than approximately 50 s^{-1}, it is recommended that force be measured either by strain gauges in a test piece area subjected to purely elastic deformation (dynamometer zone; see Figure 1) or by means of a local dynamometer, such as a strain gauge placed on a grip (see References [2], [6], [7] and [8]).

Spontaneous transfer of force into a test piece at high strain rate causes the test piece and parts of the testing machine to oscillate increasingly as the displacement rate grows. These oscillations can be either of a longitudinal or of a bending type. They are recorded as oscillations superposed to the force signal and thus in the stress-strain curve. The inherent material deformation behaviour can be observed as phenomena similar to “force oscillations” (discontinuous yielding associated with Lüders band propagation, dynamic strain ageing, deformation twinning, etc,).

Prevention or at least reduction of oscillations in the force signal is an important criterion when selecting the dynamometric procedure. In general, it can be ascertained that the further the force is measured outside the gauge length and/or the higher the velocity of the actuator is, the greater are the oscillations.

It can be advantageous to apply a strain gauge on each side of the test piece to determine the proportion of oscillations resulting from bending effects. Each signal is analysed separately in order to assess any bending component. The use of damping elements in the load train in order to minimize oscillations should be carried out with care. Damping reduces the strain rate at the beginning of the test, which in turn can influence the yield strength.

Calibration of the dynamometer should be performed in a suitable manner. Test pieces fitted with strain gauges can be calibrated quasi-statically. To this end, a test piece is subjected to a force, which corresponds to a maximum of two thirds of the yield strength or proof stress in order to determine the calibration factor. Other methods of force calibration are described in References [2], [9] and [10].

For tests at strain rates lower than 10 s^{-1}, the upper frequency limit, f_u (–3dB) shall be at least 10 kHz. For higher strain rates, Equation (2) applies according to ESIS P7 (see Reference [1]):

$$f_u \geq 1000 \times \dot{e} \tag{2}$$

where

f_u is the upper frequency limit of the force measuring system;

$\dot{e}$ is the strain rate.

8.3 Extension measurement

Different measuring systems are in use for reliable measurements of extension in the area of the original gauge length. Usually, mechanical clip-on extensometers can be used up to strain rates of approximately 1 s^{-1}. At strain rates higher than 1 s^{-1}, the mechanical clip-on extensometers shall be replaced by inertia-free measuring systems, e.g. strain gauges, electro-optical extensometers, laser measuring systems or high-speed photography.

NOTE The determination of strain via actuator displacement, e.g. LVDT (linear variable differential transformer) measurement or other measurements outside the original gauge length, L_o, is not recommended. These can only be applied if the stiffness of the machine and its load train components have been taken into account appropriately.

It is desirable to carry out the entire test using only one measurement technique. If this is not possible, or if higher measuring accuracy is required, a number of techniques may be combined. For tests within the range of uniform strain, it is permissible to use an initial extensometer gauge length, L_e, shorter than the original gauge length, L_o, if the homogeneity in material behaviour is sufficient. The true strain may also be recorded directly by suitable measuring instruments.

Calibration of the measuring instrument for stroke/strain measurement shall be performed in a suitable manner.

For tests at strain rate lower than 10 s^{-1}, the frequency limit, f_u (–3dB), shall be at least 1 kHz. For higher strain rates, Equation (3) (see Reference [1]) applies:

$$f_u \geq 100 \times \dot{e} \tag{3}$$

where

f_u is the upper frequency limit of the extension measuring system;

$\dot{e}$ is the strain rate.

It is basically recommended that the percentage elongation after fracture be determined from markings placed on the test piece before the test, as stated in ISO 6892-1. These markings shall be applied in such a way that they have no effect on the deformation behaviour.

8.4 Data acquisition

The data pertaining to force and stroke/strain measurement are recorded with a sampling rate of at least four times the limit frequency of the force measurement. These data are referred to as raw data and represent a fundamental part of the test result. For subsequent evaluation, the number of data pairs may be reduced.

9 Evaluation of tests

9.1 Stress-strain curve

In a manner similar to the quasi-static tests in accordance with ISO 6892-1, force, extension and strain, as well as the stress-strain curve, shall be determined.

The stress-strain curve is calculated from the originally measured signals. For further evaluation, it is advantageous to have a monotonically increasing strain signal for the duration of the test. If this is not possible for technical reasons related to measurement (e.g. signal disturbance), a monotonic signal may be obtained via different procedures, for example the application of a moving average procedure, the determination of a polynomial approximation or a spline on a polynomial basis or a filter. If, however, other test-related factors are responsible, such as a drop in speed, this may be applied to a limited extent only. In this case, the effects on the variation of the strain rate during the test (see 9.3) shall be checked. The interpretation of the stress-strain curve with respect to force oscillations is the responsibility of the user of the test results.

For further evaluations, such as the determination of key values and the establishment of a stress-strain curve appropriate for FE (finite element) calculations, a smoothed stress-strain curve may be necessary. This can be achieved by applying different procedures, such as the formation of a moving average, the determination of a polynomial approximation, a spline on a polynomial basis or a filter. The selection of a smoothing procedure

depends on different prerequisites, for example the form of the curve, the amplitude of the oscillations or the number and distribution of the measured values. In general, it shall be pointed out that the use of such a smoothing procedure contains the inherent danger of loss of information or subjective evaluation. It shall be indicated in the test report whether and how the data are filtered or post-processed.

An example of a smoothing procedure to filter load cell ringing is described in References [11] and [12].

NOTE Before filtering, smoothing, etc., it is necessary to optimize machine parameters, such as clamping and/or alignment of the slack adapter, in order to achieve raw data of sufficient quality.

9.2 Determination of key values

For high-speed tensile tests, the key mechanical values of lower yield strength, R_{eL}, or proof strength, R_p, tensile strength, R_m, percentage plastic extension at maximum force, A_g, and percentage elongation after fracture, A, are determined from the stress-strain curve in accordance with the definitions and designations given in ISO 6892-1.

The proof strength, R_p, can be evaluated as $R_{p0,2}$ at a plastic strain value of 0,2 % (consistent with ISO 6892-1) and, in addition, with higher plastic strain values (e.g. 1 %, 2 % or 3 %) clearly marked accordingly. R_{p3} (in addition to $R_{p0,2}$) has proven to be an advantageous comparative value. In the case of uncertainties in the determination of $R_{p0,2}$, e.g. on account of oscillations with high amplitudes (greater than ±5 % of R_m value), its determination should be omitted. Proof strengths at higher strain values should be reported instead. The uncertainty in measuring proof strength values reduces with increasing strain due to lower amplitude of the oscillations.

In contrast to upper yield strength, the lower yield strength, R_{eL}, is seen as a key material value in dynamic tests. In contrast to ISO 6892-1, R_{eL} is defined as the mean value of stress during plastic yielding before work hardening commences. If the value cannot be reliably determined as defined due to oscillations in the force signal, the statement is abandoned and only values corresponding to higher plastic strain values are determined.

The tensile strength, R_m, describes the maximum of the stress-strain curve as treated according to 9.1. The percentage total extension at maximum force, A_{gt}, is the strain related to tensile strength in analogy with the quasi-static tensile test.

It is generally recommended that the percentage elongation after fracture, A, as described in ISO 6892-1, be determined from the markings placed on the test piece prior to testing.

Alternatively, the percentage elongation after fracture can be read from the stress-strain curve at the point of fracture as long as the extension of the gauge length, L_o, can be measured with conventional methods of strain-to-fracture determination. However, at the same time, the percentage elongation after fracture should still be determined from the markings placed on the test piece prior to the test. If percentage elongation after fracture is lower than 5 %, the value resulting from the stress-strain curve shall be used.

9.3 Strain rates

In addition to the nominal engineering strain rate according to Equation (1), the achieved mean engineering strain rate of a test can be calculated from the percentage elongation after fracture, A, and the time to fracture, t_f, using the following:

$$\dot{e}_{mean} = A / t_f \tag{4}$$

This key value deviates from the nominal engineering strain rate depending on the compliance of the clamping device or on the deformability of the material. It also does not provide any information about the local strain rate in the necking area of the test piece.

The time-dependent engineering strain rate signal, $\dot{e}(t)$, which is determined by differentiation of the strain signal, provides more detailed information on the variation of the strain rate during the whole test. This time-dependent (respectively strain-dependent) strain rate curve is necessary, for instance to establish whether the targeted strain rate of the test has been achieved at the yield point (see Figure C.1).

An important physical parameter is the mean value of the time-dependent engineering strain rate in the strain hardening range, $\dot{e}_{pl}$, which is determined as the average value of the strain rate in the range between time at yield strength or 1 % strain, i.e. t (start of hardening) and time at maximum force, i.e. $t(F_m)$ (see Figure C.1):

$$\dot{e}_{pl} = M\{\dot{e}\ (t_{soh}) \ldots \dot{e}\ t(F_m)\} \tag{5}$$

where

M	is the arithmetical average of function $\dot{e}(t)$;
$\dot{e}\ (t)$	is the data set of engineering strain derivative with respect to time;
t_{soh}	is the time at start of hardening;
$t(F_m)$	is the time at maximum force.

This strain rate is referred to as the “characteristic strain rate” and used in reports. If the nominal and mean engineering strain rates are within 10 % of each other, the mean engineering strain rate may be used as the characteristic strain rate. If the difference exceeds 10 %, the time-dependent engineering stain rate curve, $\dot{e}(t)$, should be determined and discussed.

For a qualified test with a sufficiently constant strain rate, it is required that the deviation between the time-dependent engineering strain rate and the characteristic strain rate be less than ±30 % from start of hardening to time at maximum force (see Figure C.1).

NOTE Despite an approximately constant actuator velocity in high strain rate tensile tests, the actual strain rate varies with engineering strain (see e.g. Figure C.1). Because strain rate increases from zero in the elastic region, the average elastic strain rate is less than the nominal engineering strain rate. At the onset of plastic deformation, variations in the nominal engineering strain rate are observed, which depend on the system compliance characteristics and potential variations in actuator velocity experienced on slack adapter engagement. This behaviour is strongly dependent on the material properties, e.g. pronounced upper and lower yield strength, strain hardening properties, ductility and susceptibility to adiabatic heating. Beyond uniform strain, the presence of localized deformation leads to localized higher strain rates, which deviate significantly from the nominal engineering strain rate.

Fixing the mean value of the strain rate between start of yielding or 1 % strain and strain at maximum force is not meaningful if the strain at maximum force is very small. In this case, a possible alternative can be to define a specific strain range to determine the mean value of the strain rate (e.g. between 3 % and 10 % of strain).

9.4 Determination of flow curves

Equations (6), (7) and (8) are valid only in the case of isotropic material behaviour.

Under the assumption of constant volume up to maximum force, it is possible to calculate a flow curve. This is based either on the plastic strain only [see Equations (6) and (7)] or on the total strain (elastic plus plastic) [see Equation (8)]. (Some FEM codes require the total strain for flow curves as initial values.)

Depending on whether or not elastic parts of the measured strain are taken into account, various definitions of flow curves result.

The flow curve from plastic strain is obtained if only plastic strain values are taken into account. True stress and true strain up to uniform strain are obtained from Equations (6) and (7):

$$\varepsilon_{pl} = \ln(1 + e_t - R/E) \tag{6}$$

$$\sigma = R(1 + e_t) \tag{7}$$

$$\varepsilon_t = \ln(1 + e_t) \tag{8}$$

10 Test report

All relevant information with respect to test procedure and test results shall be documented. The test report shall contain information on the following relevant items:

a) reference to this part of ISO 26203, i.e. ISO 26203-2:2011;

b) material designation and information on material condition, if known;

c) test piece geometry and dimensions;

d) test piece designation;

e) location and orientation of test piece, if known;

f) test apparatus;

g) measuring technique for force;

h) measuring technique for extension in the test section gauge length (to calculate strain);

i) test conditions (temperature; nominal, mean and characteristic strain rate);

j) information on processing of raw data (smoothing, fitting, etc.);

k) test results (key values for strength and ductility, stress-strain curves).

By agreement between the interested parties, the determined key values and raw data of stress-strain and flow curves may be provided in suitable format for integration into databases.

NOTE Figure C.1 shows an example of an engineering stress-strain curve as measured at a target strain rate of 250 s^{-1} in a high-speed tensile test, which was part of a VDEh[1)] round-robin exercise (see Reference [13]). The stresses were determined using strain gauges in the dynamometer section of the test piece, whilst strains were measured optically within the gauge section. This example shows a force signal with superposed oscillations with sufficiently small amplitudes (smaller than ±5 % of the averaged signal). Therefore, it is possible to represent the curve after yielding with sufficient accuracy by a polynomial curve (in this case, a second-order polynomial). Additionally shown is the mean value of the time-dependent engineering strain rate as determined by differentiation of the recorded strain. This strain rate is between the onset of yielding throughout the range of uniform strain within an agreed tolerance band of ±30 % of the target strain rate of 250 s^{-1}.

Figure C.1 may be regarded as a recommended example of an appropriate graphical documentation of results from tensile tests at high strain rates.

1) Verein Deutscher Eisenhüttenleute (German Iron and Steel Institute), Sohnstraße 65, D-40237 Düsseldorf.

Annex A
(informative)

Testing equipment

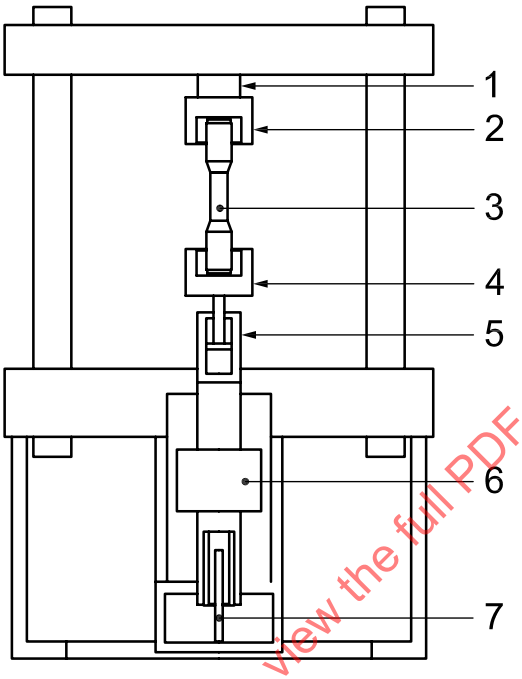

Key

1 load cell
2 fixed grip
3 test piece
4 accelerated grip
5 slack adapter
6 actuator
7 displacement transducer

NOTE See Reference [14].

Figure A.1 — Example of a testing machine for high strain rate tensile tests — Schematic diagram

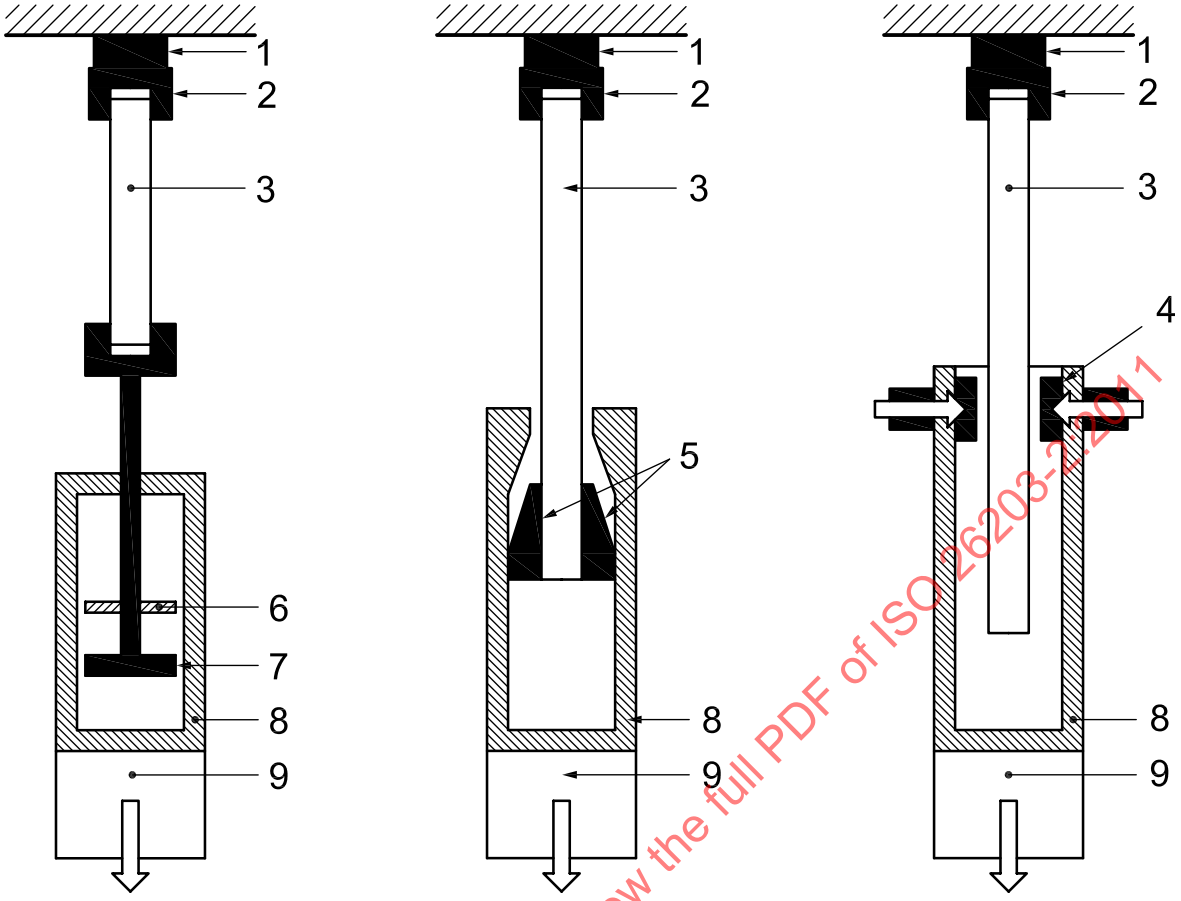

a) Example 1 b) Example 2 c) Example 3

Key

1 load cell
2 fixed grip
3 test piece
4 pre-loading unit
5 wedged jaws, screwed
6 damping washer
7 slack rod
8 slack adapter
9 actuator rod

NOTE See Reference [14].

Figure A.2 — Examples of grip systems for high strain rate tensile testing with different arrangements for actuator acceleration and slack adapter — Schematic diagram